This is a digital copy of a book that was preserved for generations on library shelves before it was carefully scanned by Google as part of a project to make the world's books discoverable online.

It has survived long enough for the copyright to expire and the book to enter the public domain. A public domain book is one that was never subject to copyright or whose legal copyright term has expired. Whether a book is in the public domain may vary country to country. Public domain books are our gateways to the past, representing a wealth of history, culture and knowledge that's often difficult to discover.

Marks, notations and other marginalia present in the original volume will appear in this file - a reminder of this book's long journey from the publisher to a library and finally to you.

Usage guidelines

Google is proud to partner with libraries to digitize public domain materials and make them widely accessible. Public domain books belong to the public and we are merely their custodians. Nevertheless, this work is expensive, so in order to keep providing this resource, we have taken steps to prevent abuse by commercial parties, including placing technical restrictions on automated querying.

We also ask that you:

+ *Make non-commercial use of the files* We designed Google Book Search for use by individuals, and we request that you use these files for personal, non-commercial purposes.

+ *Refrain from automated querying* Do not send automated queries of any sort to Google's system: If you are conducting research on machine translation, optical character recognition or other areas where access to a large amount of text is helpful, please contact us. We encourage the use of public domain materials for these purposes and may be able to help.

+ *Maintain attribution* The Google "watermark" you see on each file is essential for informing people about this project and helping them find additional materials through Google Book Search. Please do not remove it.

+ *Keep it legal* Whatever your use, remember that you are responsible for ensuring that what you are doing is legal. Do not assume that just because we believe a book is in the public domain for users in the United States, that the work is also in the public domain for users in other countries. Whether a book is still in copyright varies from country to country, and we can't offer guidance on whether any specific use of any specific book is allowed. Please do not assume that a book's appearance in Google Book Search means it can be used in any manner anywhere in the world. Copyright infringement liability can be quite severe.

About Google Book Search

Google's mission is to organize the world's information and to make it universally accessible and useful. Google Book Search helps readers discover the world's books while helping authors and publishers reach new audiences. You can search through the full text of this book on the web at `http://books.google.com/`

UC-NRLF
$B 76 578

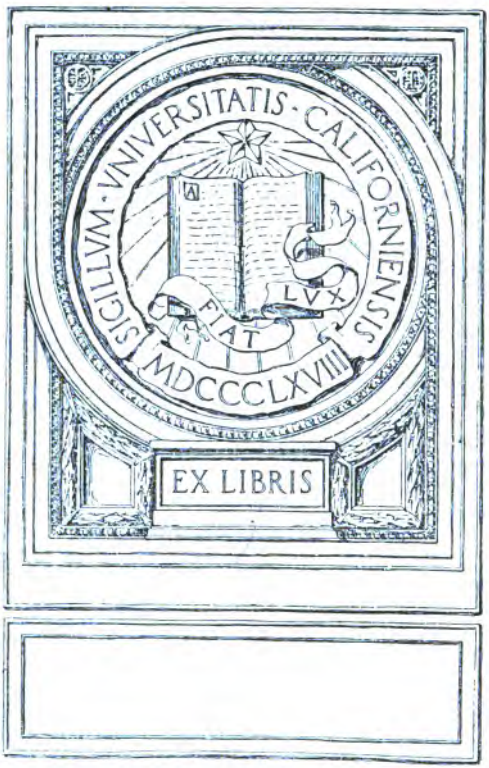
SIGILLVM · VNIVERSITATIS · CALIFORNIENSIS
LVX
FIAT
MDCCCLXVIII
EX LIBRIS

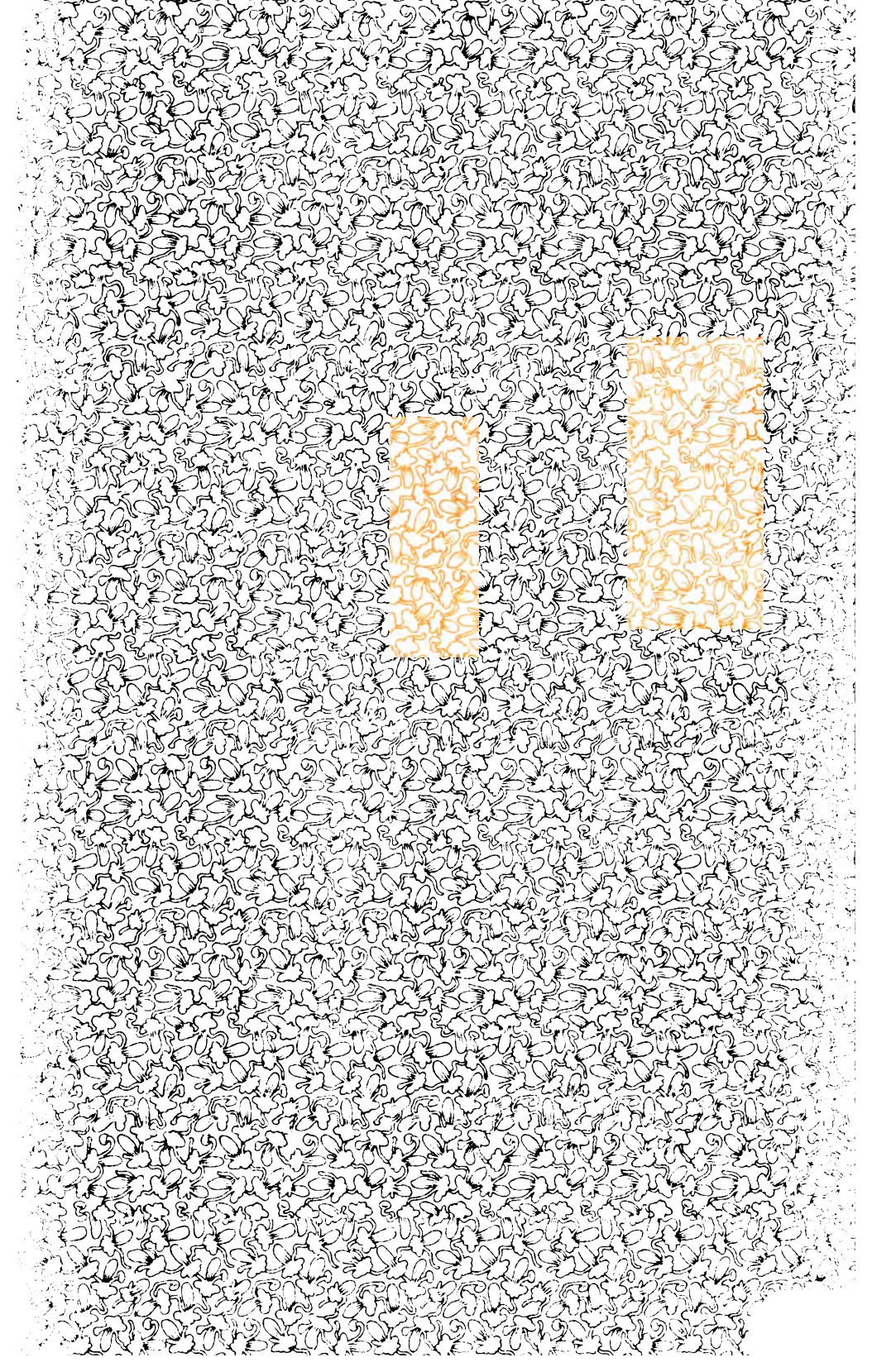

VALVE GEARS

BY

CHARLES H. FESSENDEN, M. E.
ASSISTANT PROFESSOR OF MECHANICAL ENGINEERING
UNIVERSITY OF MICHIGAN

FIRST EDITION

McGRAW-HILL BOOK COMPANY, INC.
239 WEST 39TH STREET, NEW YORK
6 BOUVERIE STREET, LONDON, E. C.
1915

TJ547
F4

Copyright, 1915, by the
McGraw-Hill Book Company, Inc.

300314

UNIV. OF
CALIFORNIA

THE·MAPLE·PRESS·YORK·PA

PREFACE

It has been the intention of the author in preparing this book, to present an elementary treatise on the subject of valve gears. Only steam engine valve gears are discussed, and, while the effort has been made to cover the best known and most representative types, the aim has been to produce a book suitable as a text rather than a reference book. The subject matter has been used in the classes at the University of Michigan for several years.

The Bilgram and Zeuner diagrams are both used throughout the book and given almost equal consideration. Rather than introduce a third diagram, the Reuleaux, some of the most useful constructions belonging to that diagram have been incorporated in the Zeuner solutions.

The author desires to express his thanks to his brother, Professor E. A. Fessenden, of the University of Missouri, and to his colleagues, Professors S. J. Zowski, W. F. Verner, and J. E. Emswiler, of the University of Michigan, for their assistance in preparing the work, and to the various manufacturers who have kindly furnished illustrations of their products. Professor E. R. Hedrick, of the University of Missouri, was of material assistance in reading the proofs, and made many helpful suggestions and criticisms.

C. H. F.

ANN ARBOR, MICH.,
January, 1915.

CONTENTS

PAGE

PREFACE v

CHAPTER I

INTRODUCTION 1
Relative positions of the piston and crank—The valve gear of a simple, high speed engine—The action of the valve—Steam lap—Exhaust lap—Port opening—Lead—Angle of advance—Relative positions of valve, eccentric and crank.

CHAPTER II

VALVE DIAGRAMS 17
The Zeuner diagram—The Bilgram diagram.

CHAPTER III

USE OF VALVE DIAGRAMS 25
Five typical problems solved by both diagrams.

CHAPTER IV

PORT OPENINGS AND PASSAGE AREAS 40
Discussion of nominal steam speeds—Angular movement of connecting rod—Overtravel.

CHAPTER V

FORMS OF SLIDE VALVES 58
Piston valves—Multiple-ported valves—Allen valve—Double-ported piston valve—Double-ported flat valve—Ball and Wood telescopic valve—Four-ported valve—Skinner engine valve—Location of ports in the valve seat—Sliders and rockers.

CHAPTER VI

SHAFT GOVERNORS 73
Westinghouse governor—Buckeye governor—Rites governor—Robb-Armstrong governor—The action of a governor shown on the valve diagrams.

CHAPTER VII

VALVE SETTING 80
Setting by measurement—Setting by the indicator diagram.

CHAPTER VIII

PAGE

THE DESIGN OF SLIDE VALVES 84
Equal leads and unequal cut-offs—Unequal leads and equal cut-offs—The design of a D slide valve—The design of a flat double-ported valve—Investigation of the action of a shaft governor.

CHAPTER IX

VALVES WITH RIDING CUT-OFF 100
The Meyer valve—The Buckeye engine valve gear—The McIntosh-Seymour engine valve gear.

CHAPTER X

PUMP VALVES 114
The Cameron pump—The Worthington duplex pump—The Blake-Knowles valve gear.

CHAPTER XI

REVERSING GEARS 120
The Stephenson link motion—The Walschaert valve gear—The Joy valve gear.

CHAPTER XII

CORLISS VALVE GEARS 136
General arrangement—Forms of valves—The wrist plate—The valve motion—Trip gear—Use of two eccentrics—Design—The dashpot—Four-valve engine.

CHAPTER XIII

POPPET VALVE GEARS 159
Poppet or lift valves—Poppet valve gears—Rolling levers—Rotating cams—Oscillating cams—Layout.

INDEX 169

UNIV. OF CALIFORNIA

VALVE GEARS

CHAPTER I

INTRODUCTION

Probably the part of a steam engine most interesting to the layman as well as to the experienced engineer, is the *valve gear*. This is particularly true of the more complicated arrangements such as are used on Corliss and other 4-valve engines, locomotives, reversing engines, poppet valve engines, blowing engines, etc.

The action of the valve is of *primary importance* in the operation of the engine since its function is to control the flow of steam into and out of the cylinder. In order for an engine to operate successfully and efficiently, a definite amount of steam, proportional to the load being carried, must enter and leave the engine cylinder at definite, predetermined times in the working cycle of the engine. The study of *valve gears* is essentially a study of the *relative motions and simultaneous positions* of the piston, crank and valve.

Fig. 1 shows a single cylinder high speed engine. A piston is moved backward and forward by the steam and transmits reciprocating motion through the piston rod to the cross-head. The connecting rod communicates this motion from the cross-head pin, to the crank pin. The latter moves in a circle, called the *crank circle*, whose radius is equal to one-half the stroke of the piston. Thus the reciprocating motion of the piston is changed into rotary motion by the crank, and the shaft caused to revolve.

Relative Positions of the Piston and Crank.—In Fig. 2 the full lines represent the moving parts of the crank and connecting rod mechanism at the beginning of a stroke. As the crank pin moves from A to A', the connecting rod moves from CA to $C'A'$, the point C' being found by striking an arc, with A' as a center and with a radius equal to the length of the connecting rod, cutting the center line of the engine. While the crank pin turns

from A to A' the cross-head pin and the piston move through the distance x.

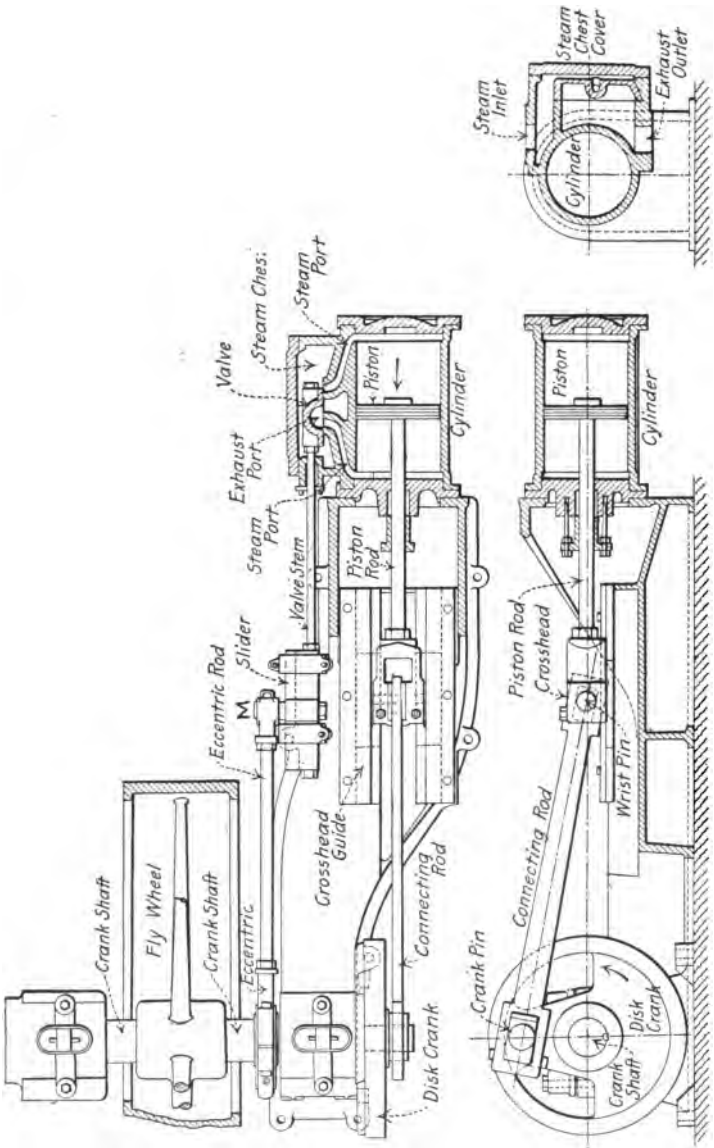

FIG. 1.—Single cylinder engine—throttling governor.

Conversely, if the distance through which the piston has moved is known, the corresponding position of the crank pin

can be found by striking an arc, with the center at C' and a radius CA, cutting the crank pin circle at A'. This arc also cuts the center line of the engine at m and it will be noticed that Am is equal to x since the connecting rod could be disconnected from the crank and the end A' rotated about C' without any change in the position of the piston.

In finding the relative positions of the piston and crank the

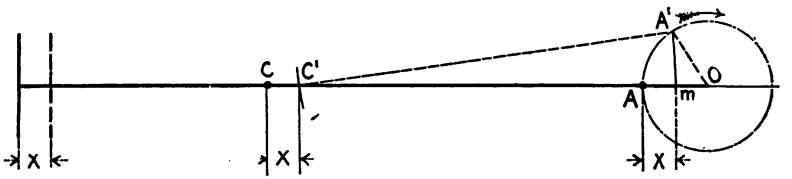

FIG. 2.

right hand end of Fig. 2 is sufficient. Suppose it is required to find the crank position when the piston has traveled 0.6 of its stroke. In Fig. 3 let AB represent the length of the stroke, then 0.6 AB equals x. The circle on AB as a diameter represents the path of the crank pin. With a radius equal to the length of the connecting rod, and a center on the center line of the engine, draw an arc through m cutting the crank pin circle at A'. Then OA'

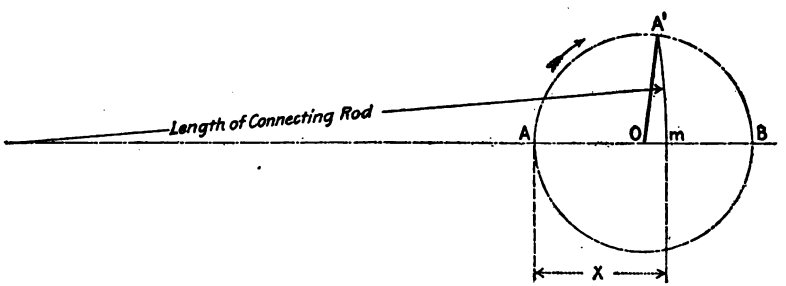

FIG. 3.

is the crank position required. If the crank position is known and the corresponding piston position required, the process is reversed. It is immaterial what scale is used in representing the stroke, provided the connecting rod length is taken to the same scale.

PROBLEM 1

Plot a curve showing piston displacements as ordinates and crank positions as abscissæ for each 30° of rotation of a 10″ × 10″ — 200 R.P.M. engine; the ratio between the lengths of the connecting rod and crank is 5 to 1.

The Valve Gear of a Simple, High Speed Engine.—The entrance of steam to an engine cylinder and its exit from the

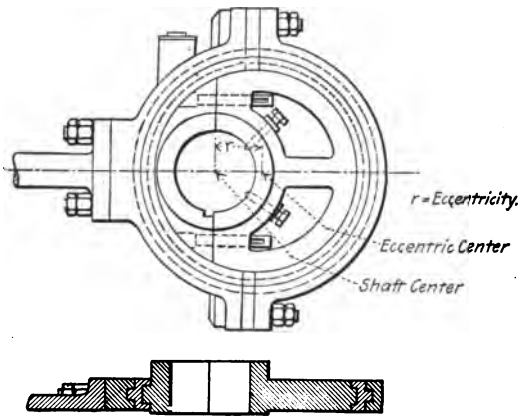

FIG. 4.—Eccentric.

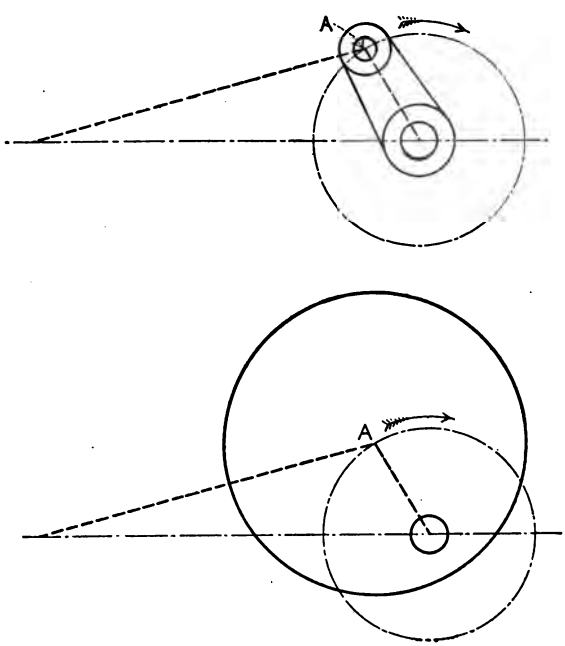

FIG. 5.—Analogy between crank and eccentric.

cylinder are regulated by one or more valves. Attention is called to the *valve gear* side of the engine illustrated in Fig. 1.

The valve derives its motion from the crank shaft through the medium of an *eccentric, eccentric rod,* and *valve stem.* The entire mechanism used to operate the valve is often designated under the collective term *valve gear.*

Fig. 4 shows the common form of eccentric; its movement is the same as that of a crank of length r, but it can be attached anywhere along a shaft while a crank can only be used at the end of a shaft. The ordinary form of crank is shown in the upper part of Fig. 5. If the pin, A, is greatly enlarged it will finally include the shaft as shown in the lower part of the figure, but the center of the pin can still revolve about the shaft as it did before. Thus it is seen that the eccentric is essentially a crank with the pin enlarged to include the shaft. The inner portion which rotates with the shaft is called the *eccentric sheave,* and the bands which surround the sheave and in which it rotates are called the *eccentric straps.*

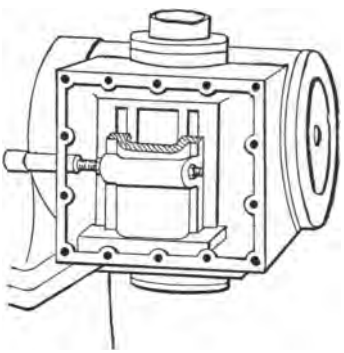

FIG. 6.—Steam chest and D slide valve.

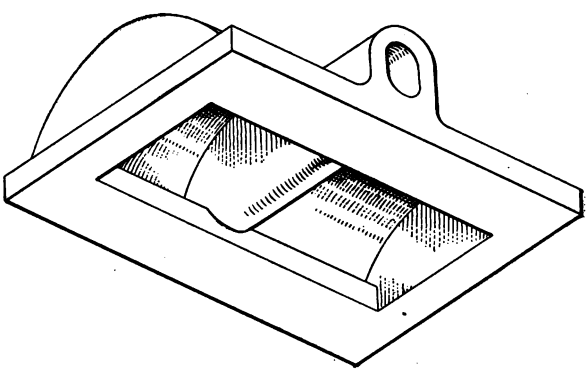

FIG. 7.—D slide valve.

The eccentric straps are fastened to the *eccentric rod,* whose motion is similar to that of the connecting rod, and the rotary motion which the eccentric receives from the shaft is transferred into reciprocating motion at the pin M (Fig. 1). The pin M is

fastened to a slider which guides it, and communicates its motion to the valve.

Fig. 6 shows the steam chest of an engine with a part section of the valve. The type of valve shown is the D slide valve which is so called because its sectional outline resembles that letter. Fig. 7 shows the valve alone.

PROBLEM 2

Describe the construction of the valve gear on the ..... engine.

The Action of the Valve.—The action of steam in an engine cylinder may be studied from a diagram called an *indicator card* which is obtained from the engine during its operation and shows the steam pressure in the cylinder corresponding to any position of the piston. Fig. 8 shows a typical indicator card. The ordinates represent the steam pressures and the abscissæ

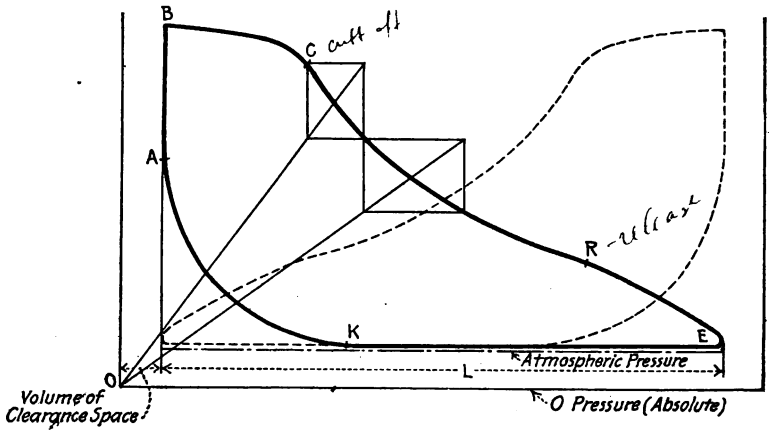

FIG. 8.—Indicator card.

the corresponding volumes. Besides representing the volume swept out by the piston, L also represents the stroke. Just before the beginning of the stroke, the valve opens the port leading into the cylinder and the steam pressure behind the piston rises to the maximum value B. The valve remains open and allows steam to flow in behind the piston, thus maintaining the high pressure shown by the approximately horizontal line BC, until C is reached. The point C is known as the *point of cut-off*. Here the valve closes, no more steam can enter the cylinder and

the steam which is in the cylinder expands and the pressure falls as represented by the *expansion curve CR*, until the valve releases the steam and allows it to escape into the exhaust. The point *R* shows when this release occurs and is called the *point of release*. The curve *RE* gives the pressures during the sudden expansion to the pressure in the exhaust pipe.

During the return stroke, the steam, having performed its work and fallen to the pressure *E*, is pushed out into the exhaust pipe until the valve again closes the port leading from the cylinder. Any steam which is then imprisoned is compressed into the end of the cylinder and its pressure rises as shown along the curve *KA*. This curve is called the *compression curve* and *K* is the *point of compression*. When the piston is almost at the end of its stroke and while it is still compressing the steam left in the cylinder at compression into the clearance space, the valve admits a fresh supply, at *A*, and the operation is repeated. *A* is called the *point of admission*.

A similar series of events occurs on the other side of the piston and the card for that end of the cylinder is shown dotted. While one side is being acted upon by live steam the other side is pushing out an exhaust charge.

To draw the cards shown in Fig. 8 any scales may be chosen, but it is convenient to have the height of the card approximately half the length. Starting, then, with an initial pressure at *B*, the line from *B* to *C* should first be nearly horizontal and then slope down to represent the throttling or wire-drawing when the valve closes. From *C* to *R* the curve is drawn as a rectangular hyperbola (with *O* as an origin) because the actual diagram from an engine shows this curve to be very nearly a rectangular hyperbola, and it is a very simple curve to draw. To construct the curve, a radial line is drawn from *O*, and horizontal and vertical lines from some point, such as *C*, through which the curve is to pass. The radial line cuts the horizontal and vertical lines and is used as the diagonal of a rectangle; the corner of the rectangle opposite *C* is another point on the curve. The compression curve from *K* to *A* is also drawn as a rectangular hyperbola through the known point *K*. Fig. 8 shows cards for a non-condensing engine, since the back pressure is above atmospheric pressure. Due to friction in the exhaust pipes and passages, the pressure in the cylinder does not fall quite so low as at the discharge end of the exhaust pipe. Depending on the freedom of the exhaust this back pressure varies

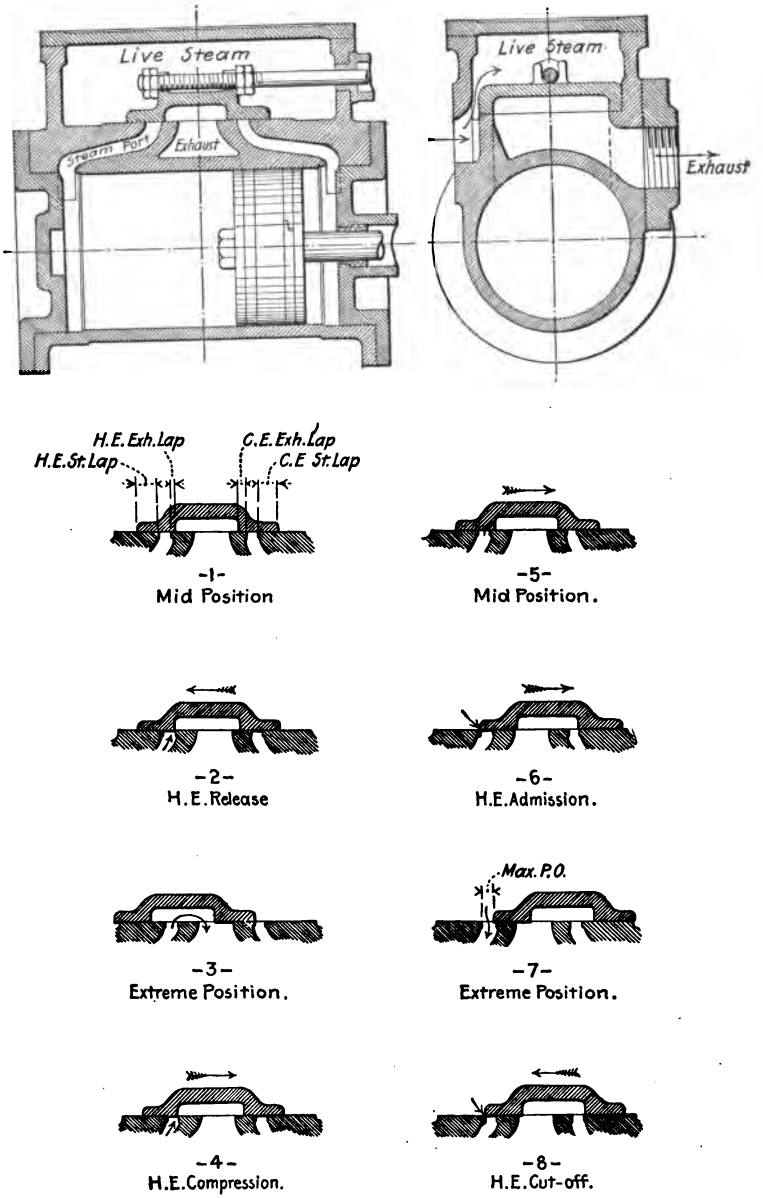
Live Steam
Steam Port
Exhaust
Live Steam
Exhaust
H.E. Exh. Lap
H.E. St. Lap
C.E. Exh. Lap
C.E St. Lap
-1-
Mid Position
-5-
Mid Position.
-2-
H.E. Release
-6-
H.E. Admission.
Max. P.O.
-3-
Extreme Position.
-7-
Extreme Position.
-4-
H.E. Compression.
-8-
H.E. Cut-off.

FIG. 9.

in practice from a fraction of a pound to about two pounds or even more in some cases.

It is the function of the valve to time the events, admission, cut-off, release, and compression, properly, and to provide the necessary opening for the passage of the steam. The time of each event is expressed as a percentage of the stroke in which it occurs; for example, in Fig. 8 cut-off is said to occur at 25.8% of the stroke, release at 75%, and compression at 70%.

The cylinder of an 8″ × 10″ – 250 R.P.M. engine, equipped with a D slide valve, is shown in Fig. 9 with the valve in its mid-position. By mid-position is meant the middle of its travel, half way between the two extreme positions. Below the cylinder drawing is a series of figures showing the valve in different important successive positions for the head end of the cylinder. A similar series could be drawn for the crank end. In all valve gear work it is better to consider only one end at a time.

It has become customary to reckon all valve movements from the mid-position. For this reason a drawing of a valve should show it in the mid-position.

Steam must be let into and out of both ends of the cylinder of a double acting engine. When one valve does all this work it may be called a "four-function" valve; thus the D slide valve is a four-function valve, each of its edges having one function to perform. We may divide the work between two valves; each then becomes a two-function valve. A separate valve may be supplied for each function as is done, for example, on a Corliss engine.

PROBLEM 3

Draw a series of sketches showing the relative positions and direction of motion of the piston, valve, crank, and eccentric when:

1. The valve is in mid-position.
2. The valve is in the admission position.
3. The valve is in the extreme position.
4. The valve is in the cut-off position.
5. The valve is in the release position.
6. The valve is in the compression position.

Steam Lap. Exhaust Lap.—On the sketch showing the valve in mid-position (Fig. 9), certain dimensions are marked *steam lap* and others *exhaust lap*. It is seen that before steam can be admitted to the head end of the cylinder the valve must be drawn

to the right by the amount of the head end steam lap. Also before release can occur on the head end the valve must be moved to the left the amount of the head end exhaust lap. The valve is in the same position for admission as for cut-off, but its direction of motion is opposite for the two events. Likewise the position of the valve for release is the same as for compression, but the direction of motion is different.

Steam lap is defined as the distance between the admission edge of the valve and the nearer edge of the steam port when the valve is in its mid-position. The steam lap is equal to the distance the valve is displaced from its mid-position when *admission* or *cut-off* occurs.

Exhaust lap is defined as the distance between the exhaust edge of the valve and the nearer edge of the steam port when the valve is in its mid-position. The exhaust lap is equal to the distance the valve is displaced from its mid-position when *release* or *compression* occurs.

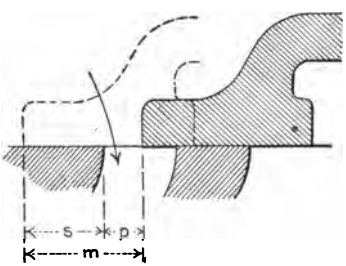

FIG. 10.

The steam laps on the two ends may or may not be equal and the same is true of the exhaust laps. The exhaust lap may be *negative*, in which case the valve fails to cover the port when in its mid-position. The width of port standing open is the *negative exhaust lap*.

Port Opening.—In Fig. 10 the valve has been moved the distance m from the mid-position, shown in dotted lines, to the position shown in full lines. The net *port opening* is the valve displacement minus the steam lap, or $m - s = p$. The port opening, p, is measured in inches.

Lead.—Lead is the width of port opening when the crank is on dead center.

The correct amount of lead depends on the size of the engine, its speed and the amount of compression. If the speed is high, considerable compression is needed to overcome the inertia of the piston and the other reciprocating parts, at the end of the stroke. The lead opening may admit enough steam to materially assist the compression in cushioning the piston. Another purpose of lead is to insure full steam pressure on the piston from the very beginning of the stroke. As some time is required for

the steam to fill the clearance space, admission must occur before the crank reaches the dead center position.

It is more logical to say that the admission should occur when the crank is from 8° to 2° before the dead center position, and to choose larger angles for fast running engines and smaller angles for slow running engines than to attempt to give definite values for the lead. The best criterion is the indicator card. If the lead is correct, the admission line will be practically vertical as shown in Fig. 11a, because admission occurs so shortly before the dead center position is reached that the distance of the piston from the end of the stroke, when reduced to the scale

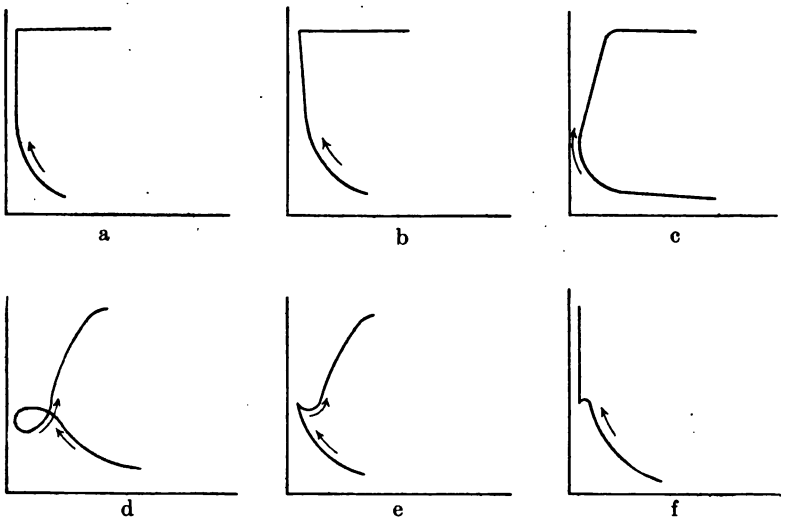

FIG. 11.—Admission lines.

of the indicator card, is scarcely more than the thickness of a pencil line.

If the admission line is not vertical but leans to the left as in Fig. 11b, it shows that the valve opens too soon. Less lead will make the line more nearly vertical. Fig. 11c shows deficient lead but admission occurring before dead center; the steam is tardy in reaching its highest pressure behind the moving piston. Admission lines as shown in Fig. 11d are sometimes obtained due to the condensation of some of the steam which was compressed into the clearance space, or to its leakage past the piston, followed by a later admission than shown in Fig. 11c. If neither condensation nor leakage past the piston occurs, but the admission is

after dead center, the card will be similar to Fig. 11e. Sometimes condensation shows on a card having a vertical admission line, by a small hook at the end of the compression curve (see Fig. 11f). This can be corrected by slightly increasing the lead.

In horizontal engines the lead should be about the same on the two ends of the cylinder. In vertical engines the lead on the top, or head end, is usually considerably less than on the bottom end because the weight of the reciprocating parts acts against the steam pressure on the up-stroke.

PROBLEM 4

Measure the leads on the ..... engine in the laboratory. Take indicator cards and write a report telling whether or not the leads are correct, and if not, how they should be corrected.

The eccentric is shown in Fig. 12 as a crank of length r. The eccentric radius is always small compared with the length of the eccentric rod, so that the angle ϕ is always small. If, then, we say that when the end of the eccentric rod is at c', half way be-

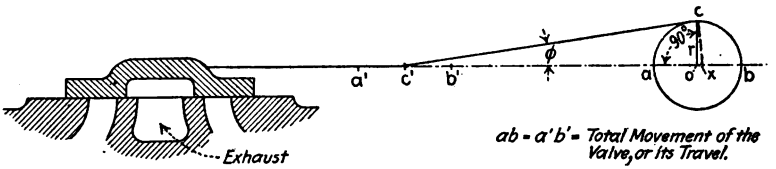

FIG. 12.

tween the two extreme positions a' and b', the eccentric center is at c, 90° from a, the error caused by neglecting the extremely small distance OX will be very slight. The same assumption cannot be made for the crank and connecting rod, because the ratio of the length of the crank to that of the connecting rod is so large. Hence the angle ϕ becomes relatively large and considerable error is involved in neglecting its versed sine.

To admit steam to the head end the valve must be drawn to the right an amount equal to the head end steam lap. Move the eccentric center from c to s (Fig. 13), where os' is equal to the head end steam lap, and the valve will be in the admission position.

Suppose the valve has a lead of L inches. Then it must stand open L inches when the crank is on center. Move the eccentric center to t, $s't'$ being equal to L. Fig. 13 shows the relative positions of the valve, crank, and eccentric.

Angle of Advance.—The angle *cot* is called the *angle of advance,* and is equal to the *lap angle, cos,* plus the *lead angle, sot.* The angle of advance may be defined as the angle through which the eccentric must be moved to draw the valve from its mid-position to the position it should have when the

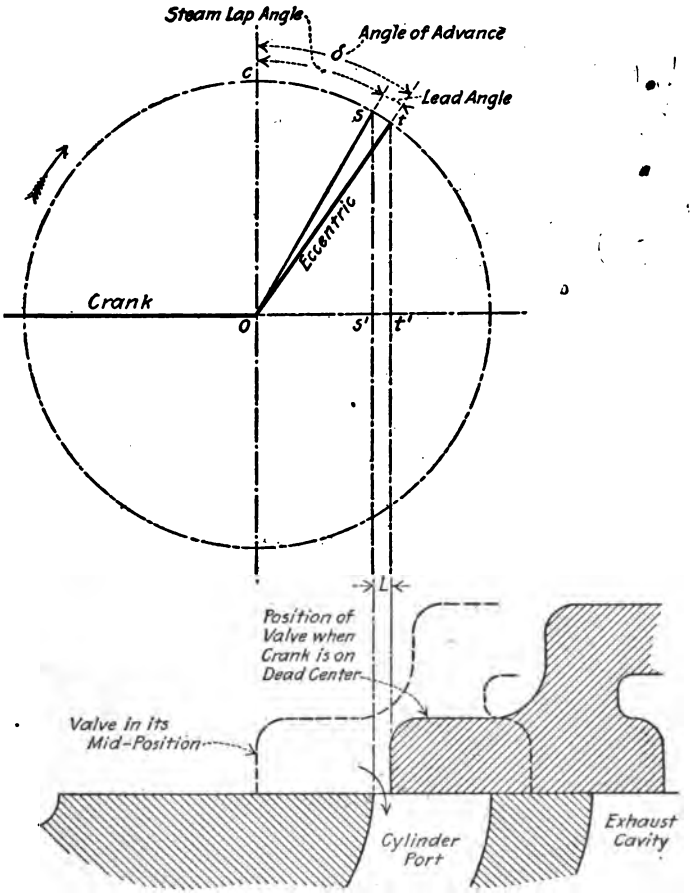

FIG. 13.—Relative positions of valve, crank, and eccentric.

crank is on dead center. Sometimes the angle of advance is called *angular advance.* It is usually designated by δ.

PROBLEM 5

If the eccentricity is 2″, the steam lap 1″ and the lead $\frac{1}{16}$″, what should be the angle of advance?

Relative Positions of Valve, Eccentric and Crank.—When the valve is in mid-position the eccentric is perpendicular to the line of stroke of the valve, as at *om* in Fig. 14. The motion of the valve is the projection of the motion of m on $p'p$.

When a valve having steam lap and lead is ready to admit steam to the head end of the cylinder, the crank should be at a position *OA* (Fig. 14) shortly before the head end dead center.

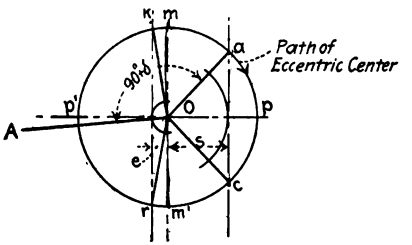

FIG. 14.

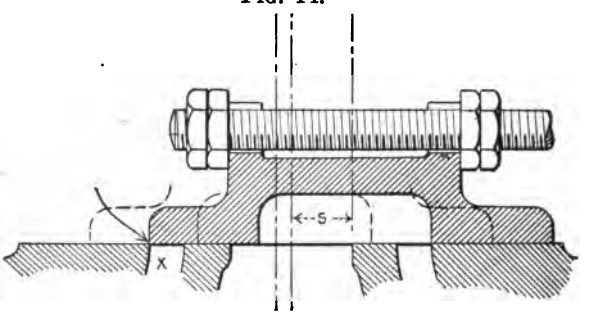

FIG. 15.—Admission and cut-off.

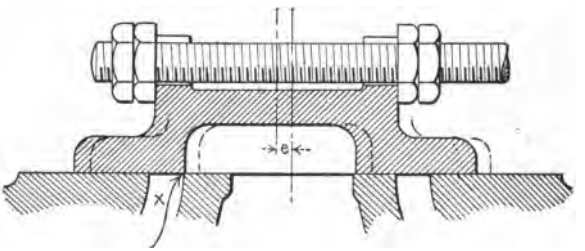

FIG. 16.—Release and compression.

The center of the eccentric is then at a, $90° + \delta$ ahead of *OA*. This position of the eccentric is necessary to draw the valve from the mid-position, which is shown dotted (Fig. 15), into the correct position for admission, which is shown in full lines. As the eccentric center rotates from a to p, in Fig. 14, the valve continues to move to the right. When p is reached the valve is in its extreme position and the port x in Fig. 15 is widest open. The

valve then starts to the left, and when the eccentric center reaches c the valve is again in the position shown in Fig. 15. This is the position for cut-off; c is directly below a, both points being a distance s (equal to the head end steam lap) from mid-position.

As the eccentric center turns from c through m' to r, the valve moves to the left from the position shown in Fig. 15, through the mid-position, which corresponds to the eccentric position m', to the position shown in Fig. 16. This is the position for head end release: the valve is to the left of mid-position the amount of the exhaust lap e. The valve continues to move to the left until the eccentric passes through the extreme position op';

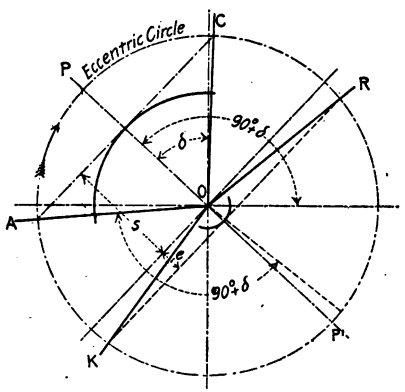

FIG. 17.

then it starts to the right. At the eccentric position ok, the valve is again in the position shown in Fig. 16. This is the position for head end compression.

The crank position for any eccentric position can be found by stepping back an angle of $90° + \delta$ from the position of the eccentric radius. To obtain the crank positions for all of the eccentric positions shown in Fig. 14 it is therefore only necessary to turn the entire figure backward through the angle $90° + \delta$. This gives Fig. 17, where the capital letters designate the crank positions corresponding to the eccentric positions indicated by the small letters in Fig. 14. The lines connecting a and c, r and k in Fig. 14 are parallel, and perpendicular to $p'p$, and of course the same is true in Fig. 17. If the valve travel and the crank positions for any three events are known, such as admission, cut-off and compression, draw OA, OC, OK (Fig. 17)

connect AC, thus determining the head end steam lap s. Then draw a parallel to AC through K, thus locating OR, the crank position for release, and determining the exhaust lap e.

PROBLEM 6

What is the purpose of steam lap?

What is the purpose of exhaust lap?

In what way is the action of a valve with + 1/8″ exhaust lap different from that of a valve with − 1/8″ exhaust lap?

How would negative exhaust laps on both ends of a valve affect the operation of the engine?

CHAPTER II

VALVE DIAGRAMS

The operation of existing valves and the design of new ones can best be studied by the aid of accurate graphical constructions, called *valve diagrams*, which show the displacement of the valve from its mid-position at any time during the revolution of the engine. Many diagrams have been devised, but the most common and convenient ones are the *Zeuner* and the *Bilgram*, named after their inventors. Each of these diagrams is popular, the Zeuner because it is older and gives more of a

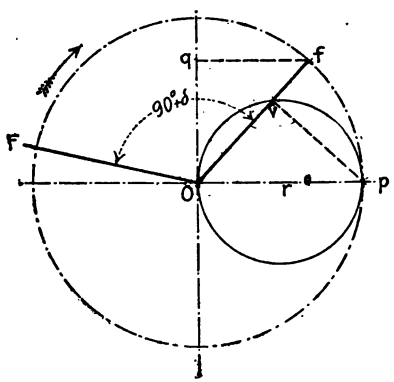

FIG. 18.

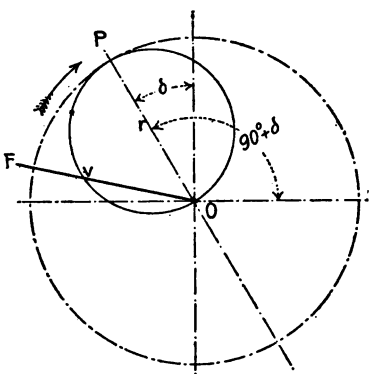

FIG. 19.

FIGS. 18 and 19.—Fundamental idea of the Zeuner diagram.

picture of the action of the valve, and the Bilgram because it is simpler for some design problems. Both are in such common use that it behooves all engineers to be familiar with both, if only to be able to read articles using either diagram. One who has much use for valve diagrams will eventually fall into the habit of choosing the diagram to suit his problem, and will quite often combine parts of both diagrams.

The Zeuner Diagram.—Draw a pair of axes through *O* (Fig. 18). With *O* as a center and a radius equal to the eccentricity, *r*, draw a circle.

Let *Of* be the eccentric position corresponding to any crank position *OF*. Then the displacement of the valve from mid-position is the distance *qf*.

On the line *Op* as a diameter draw a circle. Then *Ov* is equal to *qf* because the triangles *Oqf* and *Ovp* are equal.

By revolving all of Fig. 18 except the crank position *OF* counterclockwise through the angle $90° + \delta$, *Of* will be made to coincide with *OF* and Fig. 19 result.

Then for crank position *OF* the valve is displaced from its mid-position the distance *Ov*. This is the *fundamental idea* of the Zeuner diagram; other points can be developed with this as a basis and will be readily understood provided this principle is firmly grasped.

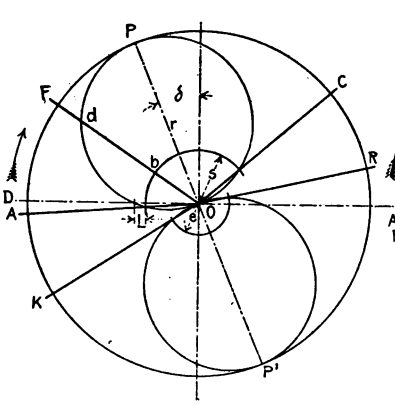

FIG. 20.

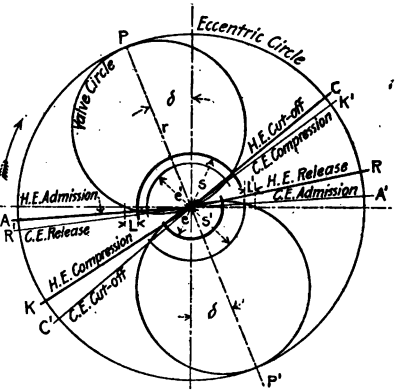

FIG. 21.—Complete Zeuner diagram.

Since the action of a valve in regulating the steam distribution is dependent upon the steam and exhaust laps, as well as upon the eccentric radius and the angle of advance, it is desirable to represent them on the diagram. For any crank position, the displacement of the valve from mid-position is the distance from *O* to the intersection of the crank line, *OF*, with the circle of diameter *r*, sometimes called the *valve circle*. The net port opening is the valve displacement minus the lap. With *O* as a center and radius equal to the head end steam lap, strike an arc as shown in Fig. 20. For any crank position such as *OF* the valve is *Od* from mid-position and the port opening is *db*.

When the crank is at *OA* and turning in the direction of the arrow the port is just about to open, so *OA* must be the crank

position for head end *admission*. When the crank has moved to the head end dead center position, *OD*, the port will be open the distance *L*, which is the head end *lead*.

The port opening increases for a time as the crank revolves; it reaches a maximum when the crank is at *P*, and then diminishes and becomes zero when the crank reaches *OC*, the position for head end *cut-off*.

Extend the line *OP* into the third quadrant and draw another circle of diameter *r* passing through *O*. With *O* as a center and radius equal to the head end exhaust lap strike an arc in the third quadrant if the exhaust lap is positive, or a dotted arc in the first quadrant if the exhaust lap is negative.

When the crank reaches *OR* the displacement of the valve from its mid-position is just equal to the head end exhaust lap so this must be the crank position for the head end release. The exhaust port opening increases for a time, reaches a maximum, diminishes, and finally becomes zero when the crank reaches the position *OK*, the position for the head end *compression*.

Thus far only the events for the head end of the cylinder have been considered. The diagram for the crank end is drawn similarly and shows the crank end lap circles and the crank positions for the crank end events. A complete diagram for both ends of the cylinder is shown in Fig. 21, in which the heavy lines and umprimed letters refer to the head end, and the light lines and primed letters to the crank end. The head end part of the diagram is reproduced from Fig. 20.

The important points to be remembered in this construction are:

1. The angle of advance, δ, is laid off from the axis which is perpendicular to the travel of the valve, in the opposite direction from that in which the crank turns.

2. The length from *O* to the intersection of the line representing any crank position (or that line produced) and the circle of diameter *r* shows the displacement of the valve from the mid-position.

In studying the action of a valve in connection with Figs. 14, 15, 16 and 17, the Zeuner diagram was partly developed but not named. If circles are drawn on *OP* and *OP'* in Fig. 17, it becomes a complete Zeuner diagram.

Useful Characteristics of the Zeuner Diagram.—1. A perpendicular dropped from P (Fig. 20) will always intersect the horizontal axis through O at a distance from O equal to the steam lap plus the lead. This is evident from Fig. 22. The shaded triangle is inscribed in the circle, and one side is a

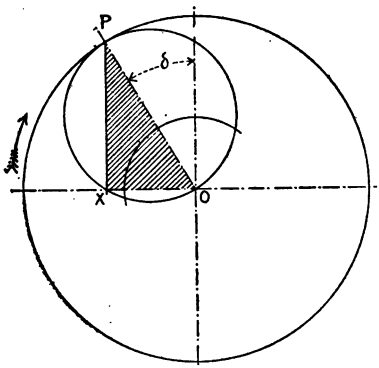

FIG. 22.

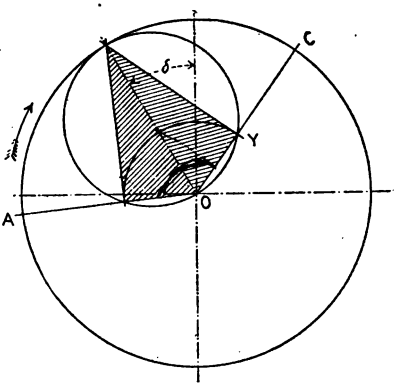

FIG. 23.

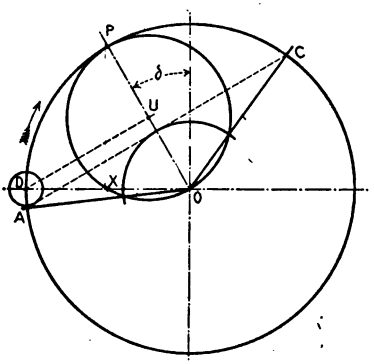

FIG. 24.

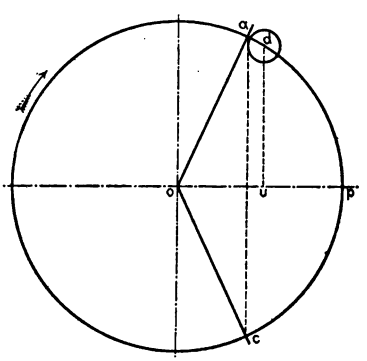

FIG. 25.

FIGS. 22 TO 25.—In these figures the circle about O must have for its radius the eccentricity r.

diameter, therefore it is a right triangle, and as previously shown OX = steam lap plus lead.

2. A perpendicular from P to the crank position for admission or cut-off intersects the valve circle at the same point as the steam lap arc (see Fig. 23). As an example of the value of this, suppose the angle of advance, the eccentricity and the crank position for cut-off are known and that it is required to find the

steam lap. Locate P, drop a perpendicular from it to OC and find the point Y; then OY = steam lap. This construction is more accurate than that which uses the intersection of OC with the valve circle.

Of course the same is true of the exhaust lap and the crank positions for the exhaust events.

3. If OA and OC (Fig. 24) are the crank positions for admission and cut-off, respectively, a circle with D as a center and a radius equal to the head end lead is tangent to AC. AC is perpendicular to OP. $OU = OX$ = steam lap plus lead. These relations will be readily seen by rotating Fig. 24 clockwise through the angle $90° + \delta$ so that the crank positions shown become corresponding eccentric positions and Fig. 25 results. Fig. 25 is similar to Fig. 13, which has been explained.

The Bilgram Diagram.—Draw a pair of axes as shown in Fig. 26. Call the eccentric radius r. When the crank is at OD the eccentric is at Od and the valve is the distance bd from its mid-position.

Suppose the crank moves through any angle, α, to the position OF; the corresponding eccentric position is Of and the valve is the distance $b'f$ from its mid-position.

Lay off the angle of advance, δ, from the axis OD' in the opposite direction from that in which the crank rotates, thus locating the fixed point Q.

From the fixed point Q drop a perpendicular, Qq, to OF (or OF extended). This perpendicular distance, Qq, is the displacement of the valve from its mid-position when the crank is at OF, because the triangle QOq is equal to the triangle $b'fO$ and Qq equals $b'f$. This is the *fundamental idea* of the Bilgram diagram.

Steam lap is represented on the Bilgram diagram by a circle with Q as a center and radius equal to the steam lap s (see Fig. 27).

Exhaust lap is shown by a circle, about the same point Q as a center, with a radius equal to the exhaust lap e. If the exhaust lap is *negative*, the circle is shown *dotted*.

When the crank is at OA (its extension tangent to the head end steam lap circle of radius s), the displacement of the valve from mid-position is the length of the perpendicular from Q to OA, which is s. The valve has been drawn to the right of mid-position by the amount of the head end steam lap, so that it is just ready to

admit steam to the head end of the cylinder. The crank position OA is the crank position for *head end admission*.

For crank position OD the valve has moved the distance QB from mid-position. A portion $QB' = s$ of this movement was

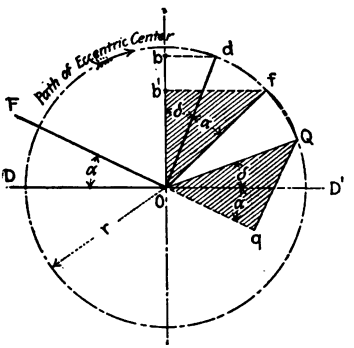

FIG. 26.

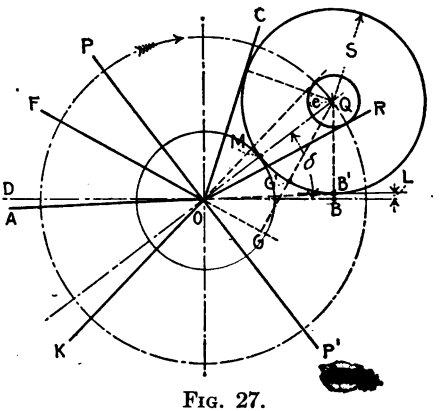

FIG. 27.

FIGS. 26 and 27.—Fundamental idea of the Bilgram diagram.

required to draw the valve over the amount of the steam lap, so that the opening of the port leading to the cylinder is $B'B$. From the definition of *lead*, $B'B$ must be the head end lead.

For any other crank position, such as OF, the valve has been moved the distance QG from mid-position, and the port opening is GG'.

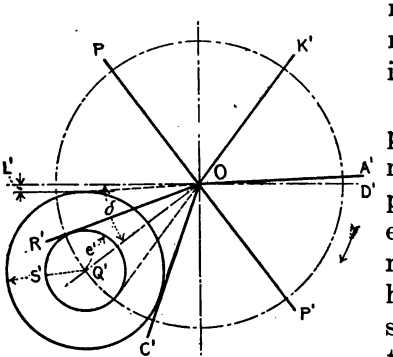

FIG. 28.

For crank position OP (perpendicular to QO) the displacement of the valve from the mid-position is a maximum and equals QO, or r. When the crank reaches OP, the valve is in its right hand extreme position; it then starts back to the left. When the crank is at OP, the eccentric is on the horizontal axis line.

When the crank reaches the position OC, the valve is at the same distance s from mid-position as when the crank was at OA, but it is now moving in the opposite direction; OC is therefore the crank position for *head end cut-off*.

When the crank reaches the position OQ, the valve is in mid-position.

As the crank moves from OQ to OR, the valve moves to the left; when the crank reaches the position OR, the valve is to the left of mid-position by the amount of the head end exhaust lap e, and is just ready to release the steam from the head end of the cylinder. Hence OR is the crank position for *head end release.*

When the crank reaches the position OP', the valve is at the left-hand extreme position and its direction of motion changes.

Compression occurs when the crank reaches the position OK, because then the valve stands to the left of its mid-position by the amount of the head end exhaust lap.

The greatest port opening to live steam is evidently OM.

This completes the discussion and analysis of the head end; a similar diagram can be drawn for the crank end, and it is given in Fig. 28 with the same notation primed.

PROBLEM 7

Given the eccentric radius $2\frac{1}{2}''$, the angle of advance 40° and the ratio of the length of the connecting rod to that of the crank 5 to 1. Using the Bilgram diagram for the outstroke and the Zeuner for the instroke, plot points showing the displacement of the valve from its mid-position for each 30° of crank rotation and connect the points by a smooth curve. Plot piston positions as abscissæ and valve displacements as ordinates, measuring up from the base line for positions to the right of mid-position and down from the base line for positions to the left so that the curve will form an approximate ellipse.

PROBLEM 8

Given the valve travel 3″, the head end steam lap 1″, the head end lead 1/16″, the head end exhaust lap 1/16″, and the ratio of the length of the connecting rod to the crank 5 to 1.

Determine the percentages of the stroke at which head end release and compression occur.

In solving this problem use both diagrams drawn about the same center so that one solution checks the other.

In solving valve problems by the Bilgram diagram it is often necessary to draw a circle tangent to two lines, OA and OC, and an arc, s, as represented in Fig. 29. This can be done by the "cut and try" method; but a better way is to locate the center by a simple geometric construction:

1. Bisect the angle between the lines OA and OC by the line OX.

2. Erect a perpendicular to OX at the point E, where it intersects the arc s.

3. Lay off DB equal to DE.

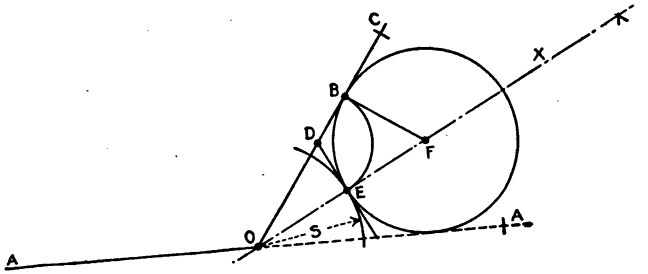

FIG. 29.

4. Draw BF perpendicular to OC, thus locating F the required center of the circle. F could be located also by bisecting the angle EDB.

In connection with the Zeuner diagram it is sometimes necessary to draw a circle tangent to two lines, as DW and WC, and passing through a known point P as illustrated in Figs. 30 and 40.

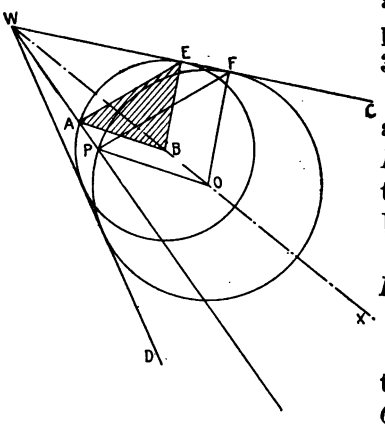

FIG. 30.

1. Draw WX bisecting the angle DWC, and with any center B, on this line, draw a circle tangent to the lines DW and WC but not passing through P.

2. Draw a line from W through P, thus locating A.

3. Draw AB.

4. Draw PO parallel to AB, thus locating the required center O.

It will also be noted that the triangles AEB and PFO are similar. This fact can be employed occasionally to obtain more accurate results than can be obtained by merely drawing AB and PO.

CHAPTER III

USE OF VALVE DIAGRAMS

The things shown on a valve diagram are:

1.	Crank position for admission	OA
2.	Crank position for cut-off	OC
3.	Crank position for release	OR
4.	Crank position for compression	OK
5.	Angle of advance	δ
6.	Eccentricity	r
7.	Valve travel	$2r$
8.	Steam lap	s
9.	Exhaust lap	e
10.	Port opening	G
11.	Lead	L

In any problem certain items are known and the others are found by constructing the diagram. Almost any case will fall under one of the following five examples. Each problem has been solved twice to illustrate both diagrams. The notation given above has been used throughout; the crank end notation is distinguished from the head end by the prime (′) mark.

PROBLEM A

Given.—Valve travel = $2r$ inches.
Crank positions for
admission, both ends, OA and OA';
cut-off, head end, OC;
release, both ends, OR and OR'.

Bilgram Solution (Fig. 31) for Problem A.[1]—Draw a pair of axes intersecting at O and with O as a center draw the circle of radius r to represent the path of the eccentric center.[2]

[1] To reduce inaccuracies and eliminate mistakes due to errors in scaling, valve diagrams should be constructed full size or larger.

[2] As only the crank angle is important in this work, it is immaterial what scale is used in representing the path of the crank pin. It simplifies the diagram somewhat if the circle representing the path of the eccentric is used to represent also the path of the crank pin to some reduced scale.

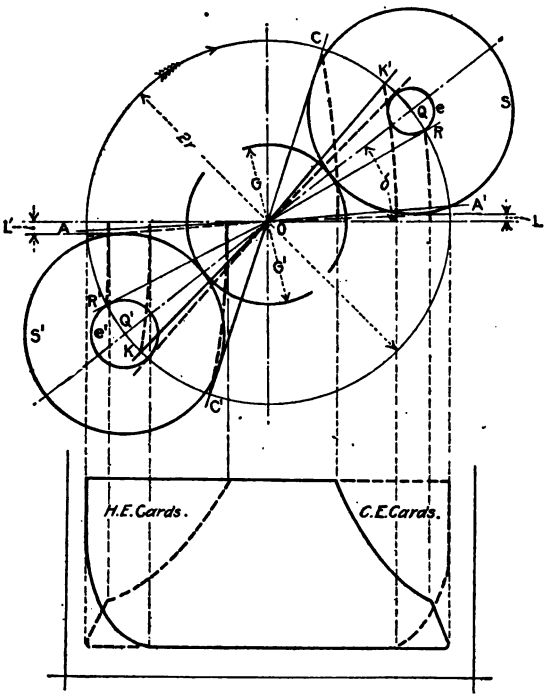

FIG. 31.—Solution by Bilgram diagram.

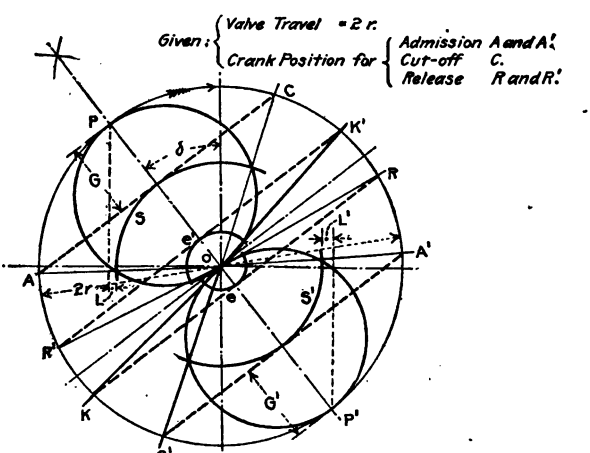

FIG. 32.—Solution by Zeuner diagram.

Problem A.

Draw the given crank positions OA (head end admission), OA' (crank end admission), OC (head end cut-off), OR (head end release) and OR' (crank end release).

The *head end steam lap*, s, is determined by the radius of the circle drawn with its center on the eccentric circle and tangent to the crank position for head end admission (extended), OA, and that for head end cut-off, OC. The center of the lap circle is the point Q from which the valve movements are measured.

Having located Q, the *angle of advance* (δ) is known.

The *head end exhaust lap*, e, is the radius of the circle drawn with Q as a center and tangent to the crank position for head end release, OR.

Draw the crank position for *head end compression*, OK, tangent (extended) to the head end exhaust lap circle but on the opposite side from OR.

An arc with center at O and tangent to the head end steam lap circle has a radius equal to the *maximum port opening*, G.

The distance between the horizontal axis and a horizontal line tangent to the lower side of the head end steam lap circle is the head end lead, L.

The center of the crank end lap circles is at Q', on the circle of radius r and diametrically opposite Q.

The *crank end steam lap*, s', is determined by the radius of the lap circle drawn with Q' as a center and tangent to OA' (extended), the crank position for admission on the crank end.

Draw OC', the crank position for *crank end cut-off*, tangent to the circle s'.

Draw the *crank end exhaust lap* circle, e', about Q' and tangent to the crank position for crank end release, OR'.

The extended *crank position for compression*, OK', is tangent to the circle e'.

The maximum port opening on the crank end is the radius G'.

The distance between the horizontal axis and the horizontal line tangent to the upper side of the steam lap circle, s', is the *crank end lead*, L'.

Having located the crank positions for the four events on both ends of the cylinder, the corresponding piston positions can be determined and the indicator cards drawn as shown.

Zeuner Solution (Fig. 32) for Problem A.—Draw a pair of axes intersecting at O, and with O as a center draw the circle of radius

r to represent the eccentric circle to one scale and the crank pin circle to some other scale.

Draw the given crank positions for head end admission, OA, crank end admission, OA', head end cut-off, OC, head end release, OR, and crank end release, OR'.

Draw the line PP' bisecting the angle AOC. This determines the *angle of advance*, δ.

Connect the points A and C on the eccentric circle by the dotted line AC; this will also be perpendicular to the line PP'.

The *head end steam lap*, s, is found by striking an arc with O as a center and tangent to the line AC.

Drop a perpendicular from P to the horizontal axis. The distance between this line and the steam lap arc, measured on the horizontal axis, is the *head end lead*, L.

Draw RK parallel to AC and perpendicular to POP' and then draw the crank position for *head end compression*, OK.

The *head end exhaust lap*, e, is found by striking an arc with O as a center and tangent to the line RK.

The *maximum port opening* on the head end is the distance G.

Similarly, for the crank end draw $A'C'$ and $R'K'$ parallel to AC and perpendicular to POP'.

Draw the crank positions for *crank end cut-off*, OC', and *crank end compression*, OK'.

Strike an arc with center at O and tangent to $A'C'$. Its radius is the *crank end steam lap*, s'.

Strike an arc with center at O and tangent to $R'K'$. Its radius is the *crank end exhaust lap*, e'.

A perpendicular from P' to the horizontal axis determines the *crank end lead*, L'.

The *maximum port opening* on the crank end is the distance G'.

PROBLEM B

Given.—Valve travel = $2r$ inches
Steam lap, head end = s inches
Leads, both ends = L and L' inches
Crank positions for release, both ends, OR and OR'.

Bilgram Solution (Fig. 33) for Problem B.—Draw a pair of axes intersecting at O, and with O as a center and radius r draw the circle representing the path of the eccentric.

Draw a line parallel to the horizontal axis and at a distance L

(the head end lead) from it. Draw the crank end lead line in the same manner.

Draw a line parallel to the head end lead line and at a distance s (the head end steam lap) above it. The intersection with the eccentric circle locates the center, Q, of the head end lap circles and determines the *angle of advance*, δ.

With center at Q draw the head end steam lap circle with the radius s. Tangent to this circle draw the crank positions for *head end admission*, OA (extended), and *head end cut-off*, OC.

Draw the given crank positions OR (head end release) and OR' (crank end release).

Locate Q', the center of the crank end lap circles, on the circle of radius r and diametrically opposite Q.

Draw the *head end exhaust lap* circle, of radius e, with Q as a center and tangent to the crank position for head end release, OR.

In a similar manner draw the *crank end exhaust lap* circle, of radius e', about Q' and tangent to the crank position for release on that end (OR').

The *crank end steam lap*, s', is determined by the radius of the crank end lap circle drawn with Q' as a center and tangent to the crank end lead line.

The crank positions for *crank end cut-off*, OC', and *crank end admission*, OA' (extended) are tangent to the circle s'.

The crank positions for compression OK and OK' are tangent (when extended) to the exhaust lap circles e and e'.

The *maximum port openings* on the two ends are determined by the radii of the arcs G and G' drawn tangent to the steam lap circles.

Zeuner Solution (Fig. 34) for Problem B.—Draw a pair of axes intersecting at O and with this point as a center and r as a radius draw the eccentric circle.

Strike an arc with center at O and radius equal to the head end steam lap, s.

Lay off the head end lead L, on the horizontal axis from the point where the steam lap arc intersects it, and erect a perpendicular to locate P.

Draw POP'. The *angle of advance*, δ, is now known.

Draw the given crank positions OR (head end release) and OR' (crank end release).

Draw RK perpendicular to PP', to locate K and then draw OK, the crank position for head end *compression*.

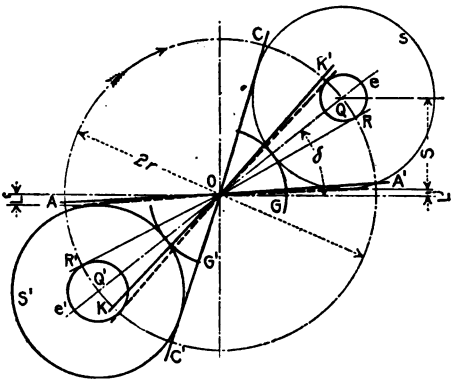

FIG. 33.—Solution by Bilgram diagram.

Given:
Valve Travel = 2 r.
Steam Lap = S.
Leads = L and L'.
Any Point in the Exhaust Diagram, say
Crank Positions for Release, R and R'.

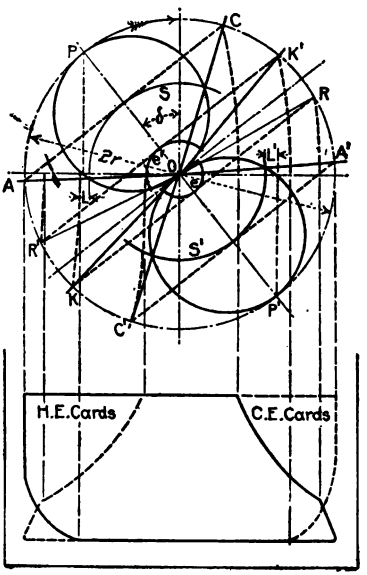

FIG. 34.—Solution by Zeuner diagram.

Problem B

Draw AC tangent to the steam lap arc, s, and perpendicular to PP' thus determining the crank positions for *head end admission*, OA, and *head end cut-off*, OC.

The *head end exhaust lap*, e, is determined by the radius of the arc drawn with O as a center and tangent to the line RK.

Erect a perpendicular from P' to the horizontal axis and from the point of intersection lay off, to the left, the crank end lead L'. Through the point so found draw the *crank end steam lap* arc, s'.

Draw $A'\ C'$ tangent to s' and perpendicular to PP', thus determining the crank positions for *admission*, OA', and *cut-off*, OC', on the crank end.

A line through R' perpendicular to PP' locates K' and gives the crank position for *compression*, OK'.

The crank end *exhaust lap* circle, e', is tangent to the line $R'K'$.

Finally draw the circles with PO and $P'O$ as diameters to show the port opening at any crank position.

PROBLEM C

Given.—Valve travel = $2r$ inches
Crank position for cut-off, head end, OC
Crank position for cut-off, crank end, OC'
Lead, head end, L inches
Exhaust laps, both ends, e and e' inches.

Bilgram Solution (Fig. 35) for Problem C.—Draw a pair of axes intersecting at O and the circle whose diameter is the valve travel, $2r$.

Draw the given crank positions OC (head end cut-off) and OC' (crank end cut-off).

Draw the *head end lead* line parallel to the horizontal axis and at a distance L (head end lead) from it.

Draw the *head end steam lap* circle of radius s, tangent to the crank position OC, and the lead line. The center, Q, of this circle will be on the bisector of the angle between OC and the lead line and at its intersection with the eccentric circle. Locating Q determines the *angle of advance*, δ.

Draw the crank position for head end *admission*, OA, tangent (extended) to the steam lap circle, s.

Draw the head end exhaust lap circle, e, with Q as a center.

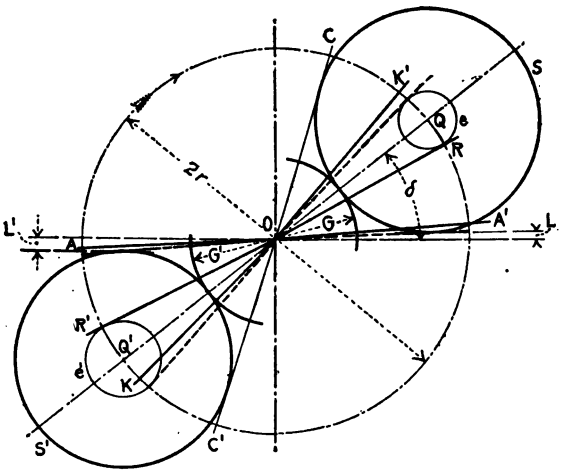

FIG. 35.—Solution by Bilgram diagram.

Given:

Valve Travel	= 2r.
Cut-off	*C and C'.*
Lead	*L.*
Exhaust Lap	*e and e'.*

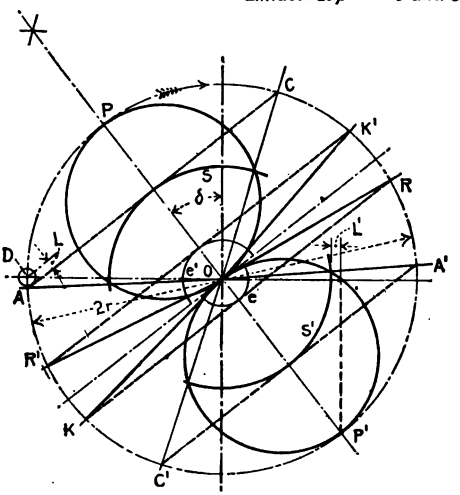

FIG. 36.—Solution by Zeuner diagram

Problem C.

The crank positions for *head end release, OR,* and *compression, OK,* are tangent to the exhaust lap circle, *e.*

Strike an arc with *O* as a center and tangent to the head end steam lap circle. Its radius is equal to the *maximum port opening, G.*

The center of the crank end lap circle is at *Q'*, on the circle of radius *r* and diametrically opposite *Q.*

The *crank end steam lap, s'*, is determined by the radius of the lap circle drawn with *Q'* as a center and tangent to the crank position for cut-off, *OC'.*

Draw the crank end lead line parallel to the horizontal axis and tangent to the crank end steam lap circle. Its distance, *L'*, from the horizontal axis is the *crank end lead.*

The crank positions for crank end *release OR'*, and *compression OK'* are tangent to the exhaust lap circle *e'.*

On the crank end the maximum port opening is *G'.*

Zeuner Solution (Fig. 36) for Problem C.—Draw a pair of axes intersecting at *O* and with *O* as a center and the length of the eccentric arm, *r*, as a radius, draw the circle to represent the path of the eccentric center.

Draw the given crank positions *OC* (head end cut-off) and *OC'* (crank end cut-off).

With *O* as a center and with radii *e* and *e'* (the exhaust laps) strike arcs as shown in the figure.

Draw a circle with *D* as a center and with a radius equal to the head end lead, *L.* Tangent to this circle and passing through *C* draw the line *AC* as shown. The intersection of this line with the eccentric circle determines the point *A* and the crank position for *head end admission, OA.*

Bisect the angle *AOC*, thus locating the line *PP'* and determining the *angle of advance,* δ.

Draw the lines *RK* and *R'K'* perpendicular to *PP'* and tangent to the exhaust lap arcs, *e* and *e'*, and in this way locate the crank positions for *release* (*OR* and *OR'*) and *compression* (*OK* and *OK'*) for the two ends of the cylinder.

A line through *C'*, perpendicular to *PP'* fixes the crank position for *crank end admission, OA'.*

The *steam laps* on the two ends are determined by the radii of the arcs, *s* and *s'*, drawn with *O* as a center and tangent to *AC* and *A'C'* respectively.

The *crank end lead, L'*, is found by erecting a perpendicular

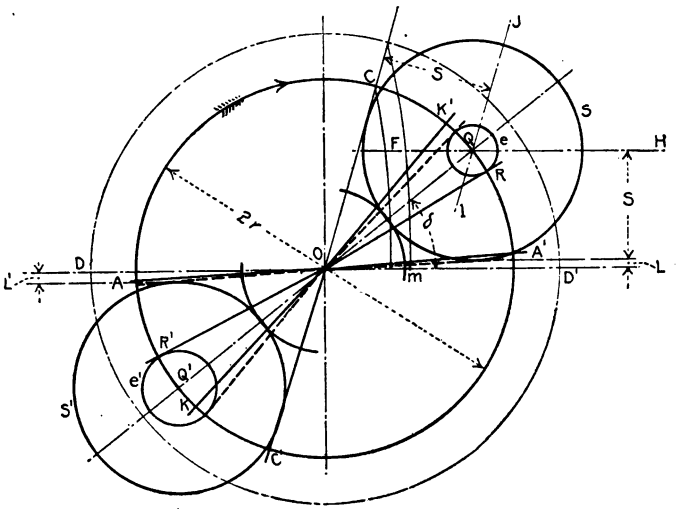

FIG. 37.—Solution by Bilgram diagram.

Given: Steam Lap = S.
Lead = L and L.
Cut-off. = C at 69% of the Stroke.
Exhaust Lap = e and e'.

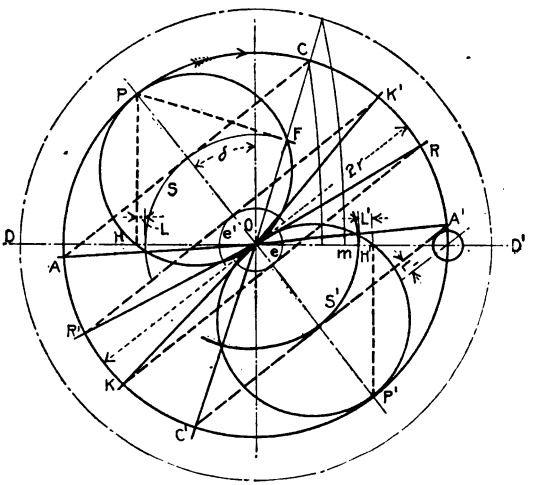

FIG. 38.—Solution by Zeuner diagram.

Problem D.

from the point P' to the horizontal axis and measuring the distance from the foot of this perpendicular to the steam lap arc, s'.

Draw the two circles with PO and $P'O$ as diameters.

PROBLEM D

Given.—Steam lap, head end = s inches
Leads, both ends = L and L' inches
Cut-off, head end = at 69% of the stroke
Exhaust lap, both ends = e and e' inches.

Bilgram Solution (Fig. 37) for Problem D.—Draw a pair of axes intersecting at O and a circle with any arbitrarily assumed radius, OD, to represent the path of the crank pin. The stroke of the piston is then represented by the diameter of the circle, DD'.

The point m, located at 69% of DD', represents the position of the piston when head end cut-off occurs and the corresponding crank position, OC, is found by swinging m on an arc whose radius represents the connecting rod length (here taken as three times the stroke, DD'), to the crank pin circle.

Draw the head end lead line parallel to the horizontal axis and at a distance L (head end lead) from it. Draw the crank end lead line in the same manner.

Draw FH and IJ parallel to the head end lead line and OC respectively and at a distance s (head end steam lap) from them. The intersection of FH and IJ *locates* Q, and the head end lap circles, s and e, can now be drawn.

The crank position for *head end admission*, OA, is tangent (when extended) to the circle s. The crank position for *head end cut-off*, OC, is also tangent to this circle.

The crank position for *head end release*, OR, is tangent to the exhaust lap circle, e, and the crank position for *head end compression*, OK, is also tangent (when extended) to this circle.

Draw QO. This determines the *angle of advance*, δ, and the *eccentricity*, r.

The center of the crank end lap circles is at Q', on the circle of radius r and diametrically opposite Q.

The *crank end steam lap*, s', is determined by the radius of the crank end lap circle drawn with Q' as a center and tangent to the crank end lead line.

The crank positions for *crank end admission*, OA', and *crank end cut-off*, OC', are tangent to the steam lap circle s'.

Draw the crank end exhaust lap circle about Q' and with the given radius e' inches.

The crank positions for *crank end release*, OR', and compression OK', are drawn tangent to the exhaust lap circle, e'.

Zeuner Solution (Fig. 38) for Problem D.—Draw the axes through O, scribe the circle to represent the path of the crank pin and locate the crank position for head end cut-off, OC, as explained above in the Bilgram solution.

With O as a center, strike the head end steam lap arc with radius s, and the head end and crank end exhaust lap arcs with radii e and e', respectively, and lay off the head end lead, L, as shown.

Draw the line HP perpendicular to the horizontal axis from the point found by laying off the lead to the left of the steam lap; draw FP perpendicular to the crank position OC, from the point where the steam lap arc intersects OC. The intersection of HP and FP locates P and determines the angle of advance, δ, and the eccentricity, r.

Draw PP' and the circle of radius r to represent the path of the eccentric center.

Draw CA perpendicular to PP' and tangent to the head end steam lap arc, s, thus locating the crank position for head end admission, OA.

Draw RK and $R'K'$ perpendicular to PP' and tangent to the exhaust lap arcs, e and e', respectively, thus locating the crank positions for release (OR and OR') and compression (OK and OK') for both ends of the cylinder.

Erect a perpendicular from P' to H' on the horizontal axis and lay off the crank end lead, L', as shown, thus determining the radius s' of the crank end steam lap arc.

Draw $C'A'$ perpendicular to PP' and tangent to the steam lap arc, s', thus locating the crank positions for crank end admission, OA', and cut-off, OC'.

Draw the circles with PO and $P'O$ as diameters.

PROBLEM E

Given.—Crank positions for
cut-off, head end, OC
compression, both ends, OK and OK'
Maximum port opening, head end, G inches
Lead, both ends, L and L' inches.

Bilgram Solution (Fig. 39) for Problem E.—Draw a pair of axes intersecting at O.

Draw the given crank positions OC (head end cut-off), OK (head end compression) and OK' (crank end compression).

Strike an arc with center at O and radius equal to the maximum port opening, G.

Draw the head end lead line parallel to the horizontal axis and at a distance L (head end lead) from it. Draw the crank end lead line in the same manner.

Draw a circle tangent to crank position OC, the maximum port opening arc and the lead line. The center of this circle will be on the bisector of the angle between OC and the lead line. The radius is easier to obtain by trial than by geometrical solution. The radius is the head end steam lap, s, and the center locates Q, thus determining the angle of advance, δ, and the eccentricity, r.

Draw the eccentric circle with radius r.

The center of the crank end lap circles is at Q', on the circle of radius r and diametrically opposite Q.

The crank end steam lap, s', is determined by the radius of the crank end lap circle drawn with Q' as a center and tangent to the crank end lead line.

The crank position for crank end cut-off, OC', is tangent to the circle, s'.

The exhaust lap circles are tangent to the crank positions for compression, OK and OK', for the head end and crank end respectively.

The crank positions for release, OR and OR', are tangent to the exhaust lap circles e and e'.

Zeuner Solution (Fig. 40) for Problem E.—Draw a pair of axes intersecting at O_1 and draw the line O_1C_1 representing the angular position of the crank for head end cut-off.

Anywhere on the line O_1C_1 but the known distance G inches (the maximum port opening) apart, locate the points x_1 and x_2. Likewise locate the points y_1 and y_2 anywhere on the horizontal axis through O_1 but the known distance G–L inches (the maximum port opening minus the lead) apart.

Erect perpendiculars to O_1C_1 at x_1 and x_2 and also perpendiculars to the horizontal axis at y_1 and y_2. These perpendiculars intersect at W and P.

Draw a circle through P and tangent to the lines Wx_2 and Wy_2.

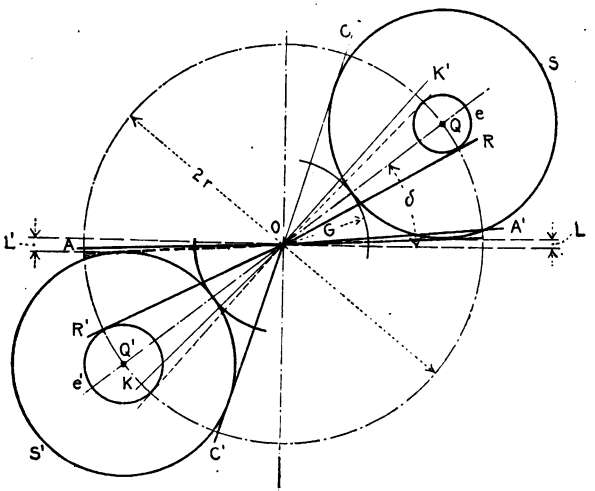

FIG. 39.—Solution by Bilgram diagram.

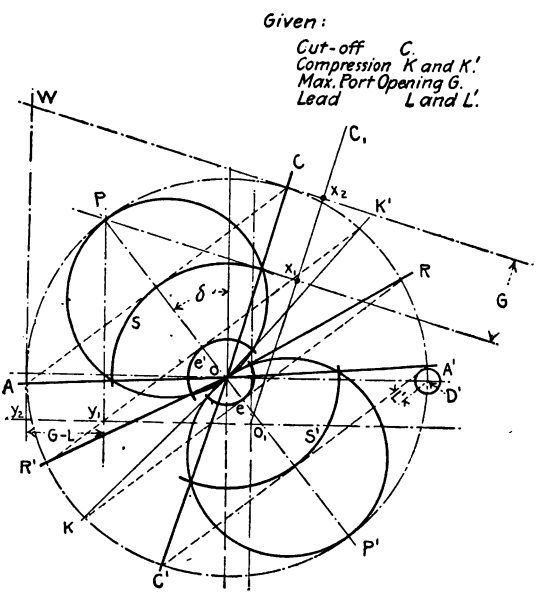

FIG. 40.—Solution by Zeuner diagram.

Problem E.

This circle whose center is at O, represents the path of the eccentric and determines the valve travel. The point O is the real center of the diagram, O_1 being merely a trial center.

The completion of the diagram involves only the constructions explained in Problems A and C. The final crank position for cut-off OC is drawn parallel to the trial position O_1C_1. The intersection of OC and PX_1 determines the head end steam lap arc of radius s. Draw AC to locate the crank position OA for head end admission.

Draw the circle of radius L' (the crank end lead) with D' as a center and then draw $A'C'$ parallel to AC thus determining crank end admission OA', cut-off OC' and steam lap s'.

Draw the given crank positions for compression, OK and OK', and determine the crank positions for release, OR and OR', and the exhaust laps, e and e', as previously explained and as evident from Fig. 40.

Draw the circles with PO and $P'O$ as diameters.

Comparison of Bilgram and Zeuner Diagrams.—It is interesting to note that if lines are drawn in the Bilgram diagram parallel to QQ' and tangent to both sides of the lap circles, a part of the Zeuner diagram results; if the two pairs of Bilgram lap circles are then moved in until their centers coincide with the intersection of the axes the Bilgram diagram will be converted into a Zeuner.

PROBLEM 9

If the angle of advance remains unchanged, what effect will increasing the steam lap have on admission, cut-off and maximum port opening?

PROBLEM 10

If the angle of advance remains unchanged, what effect will increasing the exhaust lap have on release and compression?

PROBLEM 11

Given.—Steam lap 7/8″
Width of maximum port opening $1\frac{3}{4}$″
Valve travel $5\frac{1}{4}$″
Lead 1/16″
Length of connecting rod 3 times stroke of piston.

Draw a Bilgram diagram and indicate the angles through which the crank is turning while the port is being opened and while it is being closed.

CHAPTER IV

PORT OPENINGS AND PASSAGE AREAS

One of the most important considerations in successful engine designing is to provide the correct passage areas for the steam. If the cross-sectional area of the passage-way is too small, the steam is throttled, its velocity is increased and its pressure falls; this is commonly called *wire drawing.* On the other hand if the passage-way is made too large the clearance volume is unnecessarily increased and the economy of the engine is lowered. Valves should be designed so that they will give the correct port opening. Although some throttling of the steam is unavoidable, it can be reduced by quick opening and closing of the valve.

The quantity of steam flowing into the engine cylinder at any instant while the port is open depends on the area and velocity of the piston. During the stroke of the piston its velocity, V_p, varies from zero to a maximum and then to zero again. It can be shown mathematically that the velocity of the piston at any time during the revolution is equal to

$$V_p = V_c \left(\sin \theta + \frac{\sin 2\theta}{2n}\right) \qquad [1]$$

in which V_p = velocity of the piston in feet per minute;
V_c = velocity of the crank pin in feet per minute;
θ = the angle through which the crank has moved from the head end dead center;
n = ratio between the length of the connecting rod and the length of the crank.

Assuming that $n = 6$, as is usual practice, the value of the parenthesis for different crank angles, θ, is given in Table 1.

As long as there is no expansion after passing the port opening

$$aV_p = a' V_s \qquad [2]$$

where a = area of the piston,
a' = area of the port opening,
V_s = velocity of the steam in feet per minute.

TABLE 1

θ	0°	7.5°	15°	30°	45°	60°	75°	90°
$\sin\theta$	0	.13	.259	.500	.707	.866	.966	1.000
$\frac{\sin 2\theta}{12}$	0	.022	.042	.072	.083	.072	.042	0
$\sin\theta + \frac{\sin 2\theta}{12}$	0	.152	.301	.572	.790	.938	1.008	1.000

θ	180°	187½°	195°	210°	225°	240°	255°	270°
$\sin\theta$	0	−.13[1]	−.259	−.500	−.707	−.866	−.966	−1.000
$\frac{\sin 2\theta}{12}$	0	+.0216	+.0417	+.0722	+.0834	+.0723	+.0417	0
$\sin\theta + \frac{\sin 2\theta}{12}$	0	−1.084[1]	−.2173	−.4278	−.6236	−.7938	−.9243	−1.000

Combining equations [1] and [2]

$$V_s = \frac{aV_c}{a'}\left(\sin\theta + \frac{\sin 2\theta}{2n}\right) \qquad [3]$$

It has been the practice in designing valves to base the computation for the maximum port opening on a steam speed of 6000 to 8000 feet per minute when cutting off at about 60% of the stroke, and then to use instead of the actual velocity of the piston, $V_c\left(\sin\theta + \frac{\sin 2\theta}{2n}\right)$, the average velocity $\frac{2LN}{12}$ ft. per minute. In other words

$$6000 \text{ to } 8000 = \frac{a}{a'}\ \frac{2LN}{12} \qquad [4]$$

where a' is the area of the maximum port opening,
L the stroke of the engine in inches,
N the R.P.M. of the engine,
a the area of the piston.

Choosing for illustration an 8″ × 10″ − 250 R.P.M. engine the values inserted in equation [4] give

$$7000 = \frac{50.3}{a'} \times \frac{2 \times 10 \times 250}{12} \qquad [5]$$

from which the area, a', is

$$a' = \frac{50.3 \times 2 \times 10 \times 250}{12 \times 7000}$$
$$= .3 \text{ sq. in.}$$

[1] The − sign here only indicates a change in the direction of motion.

This maximum port opening occurs when the crank has turned through half the angle between the admission position and the cut-off position. For 0.6 cut-off, the valve is widest open when $\theta = 48\frac{3}{4}°$.

The velocity of the crank pin is

$$V_c = \frac{\pi 10}{12} \times 250 = 655 \text{ ft. per minute.}$$

and the area of the piston is

$$a = \frac{8^2\pi}{4} = 50.3 \text{ sq. in.}$$

When the valve is widest open $a' = 3$ sq. in.

Then from equation [3], for cut-off at 60% of the stroke

$$V_s = \frac{50.3}{3} \times 655 \left(\sin 48\tfrac{3}{4}° + \frac{\sin 97.5°}{12}\right)$$

$$= 9170 \text{ ft. per minute.}$$

This is the actual speed of the steam through the port at the instant of maximum port opening. In equation [4] the value 6000 to 8000, with a mean of say 7000, is not an actual speed but a *nominal* one. It is not the actual speed because, for convenience, the average value $\frac{2LN}{12}$ was used as the piston speed instead of the true instantaneous value $V_c \left(\sin \theta + \frac{\sin 2\theta}{2n}\right)$.

Fig. 41 has been drawn with cut-off at 60% of the stroke and with a width of maximum port opening equal to 0.5", *i.e.*, the length of the port was assumed to be 6". Port openings taken from the diagram for different values of θ are given in Table 2. These values, together with $aV_c = 50.3 \times 655 =$

TABLE 2

θ	Forward	0°	7.5°	15°	30°	45°	60°	75°	90°
	Return..	180°	187.5°	195°	210°	225°	240°	255°	270°
Width of port opening...	.....	.....	.183"	.285"	.430"	.497"	.460"	.340"	.130"
Area of port opening, a'..	.....	.....	1.098	1.710	2.58	2.982	2.76	2.04	.78
$\sin\theta + \frac{\sin 2\theta}{12}$	Forward	0	.1385	.176	.222	.2705	.34	.494	1.281
a'	Return..	0	.0989	.127	.166	.215	.288	.452	1.281
V_s	Forward	0	4560	5800	7310	8910	11,200	16,280	42,200
	Return..	0	3260	4180	5460	7090	9480	14.900	42,200

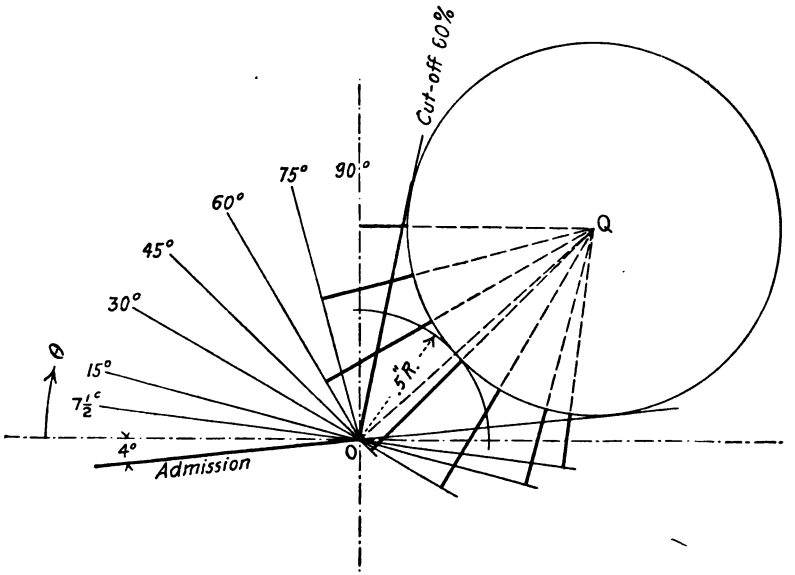
Cut-off 60%
90°
75°
60°
45°
30°
15°
7½°
4°
Admission
θ
O
Q
5" R.

FIG. 41.

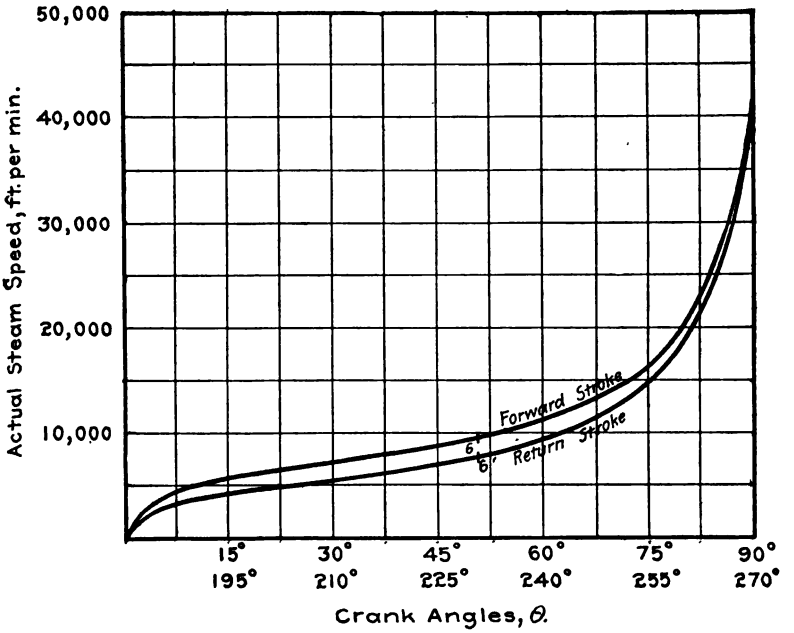
50,000
40,000
30,000
20,000
10,000
Actual Steam Speed, ft. per min.
Forward Stroke
6°
6°
Return Stroke
15° 195°
30° 210°
45° 225°
60° 240°
75° 255°
90° 270°
Crank Angles, θ.

FIG. 42.

32,947, inserted in equation [3] give the actual speed of the steam (V_s) through the port for any position, θ, of the crank. The latter values are given in Table 2 and also plotted in Fig. 42. It will be noticed that the rate of flow increases gradually until the maximum port opening is reached; then it increases more and more rapidly, approaching infinity as the valve closes.

On account of the angularity of the connecting rod the curve for the return stroke does not coincide with that for the forward stroke. In fixing the limiting steam speeds, only the forward

TABLE 3

θ		0°	7.5°	15°	30°	45°	60°	75°
Cut-off at 40%.	Width of port opening.....	...	.23″	.35″	.485″	.488″	.35″	.08″
	Area of port opening, a'.....	...	1.38	2.10	2.91	2.928	2.1	.48
	Actual steam speed through port, V_s.	0	3630	4720	6480	9080	14,730	69,100
Cut-off at 30%. $\theta = 31.2°$	Width of port opening.....	...	.31″	.41″	.50″	.415″	.16″.	....
	Area of port, opening a'.....	...	1.86	2.46	3.00	2.49	.96	.....
	Actual steam speed through port, V_s.	0	2690	4030	6290	10680	.....	.....
Cut-off at 20%. $\theta = 24.6°$	Width of port opening.....	...	.36″	.46″	.48″	.20″	.....	.....
	Area of port opening, a'.....	...	2.16	2.76	2.88	1.20	.....	.....
	Actual steams peed through port, V_s.	0	2320	3600	6550	22,200	.....	.....

stroke need be considered since the speed during the return stroke will never be greater.

Maximum port opening, for 0.6 cut-off, occurs at the points marked 6 and 6′ corresponding to crank positions $48\frac{3}{4}°$ past the dead centers.

Now suppose this process is repeated for cut-offs at 40%, 30% and 20% of the stroke, using the same maximum port opening of 3 sq. in. in each case. The results are given in Table 3 and plotted in Fig. 43.

On the curve for 40% cut-off the point marked 4 indicates the time at which maximum port opening occurs and it will be noticed that the ordinates, *i.e.*, the steam speeds, are less than indicated by the curve for 60% cut-off which has been reproduced here from Fig. 42. This is because the valve gives the same maximum opening in both cases but in the latter the period of inflow of steam is

during a time when the piston is moving slower. The curves for the earlier cut-offs at 30% and 20% fall still farther below the 60% curve and show that with a constant maximum port opening the steam speed through the port decreases as the cut-off is made earlier.

It might be suggested that if the steam speed represented by the point 6 is allowable through the maximum port opening, the points 4, 3, and 2 might be raised to the same amount. But at best the steam speed through the port is high, and some drop in

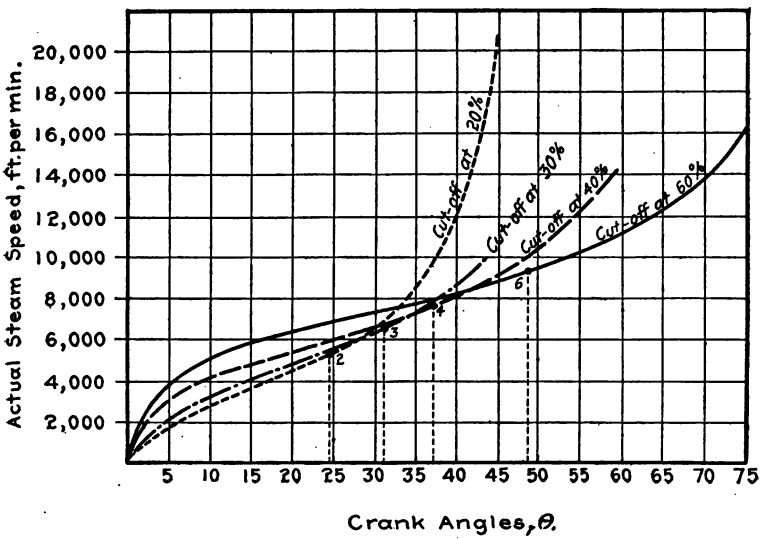

FIG. 43.

pressure due to wire drawing results. Throttling causes a larger percentage loss of work as the cut-off is made earlier. Moreover the loss due to initial condensation is proportionately larger for the earlier cut-offs. More steam must flow in to fill the space vacated by the steam which condenses and the result is a higher speed through the port opening than is represented by the curve. In reality the ordinates of the curves should be larger, particularly for the smaller values of θ. The earlier cut-offs should therefore be given special consideration.

Obviously, though, the curves for 40%, 30%, and 20% cut-off can be raised somewhat, or in other words the port openings can be reduced, without the steam speeds becoming too high. Points 4, 3, and 2 will not be raised to the same height as

6 but the curves on which they lie will be raised so that they will approximately coincide with the curve through 6. It is evident from an inspection of the curves that it is impossible to make them coincide after the point of maximum port opening is passed.

The curve through point 4 will be raised to approximate the curve through 6 by making the ordinates at $\theta = 30°$ coincide.[1] This can be done by decreasing the values of a' in Table 3 proportionately. These values were originally obtained by measuring Fig. 41 which was constructed with a maximum port opening 0.5″ wide. Reducing this port opening in proportion to the ordinates at the point $\theta = 30°$ in Fig. 43 gives

$$0.5 \times \frac{65}{73} = 0.445''$$

or the same result would be obtained from equation [5] by using instead of 7000

$$7000 \times \frac{73}{65} = 7860$$

then

$$7860 = \frac{50.3}{a'} \times \frac{2 \times 10 \times 250}{12}$$

$$a' = 2.67 \text{ sq. in.}$$

and the width of maximum port opening $= \frac{2.67}{6} = 0.445''$

That is, the *nominal steam speed* should be increased as the cut-off is made earlier.

By reconstructing Fig. 41 with a maximum port opening of 0.445″ and cut-off at 0.4 stroke and measuring the port openings for various crank angles θ, as before, the following results are obtained. Plotting these values of V_s gives the 40% curve in Fig. 44.

TABLE 4

θ	7.5°	15°	30°	45°	60°	75°
Width of port opening.	0.205″	0.31″	0.43″	0.432″	0.31″	0.071″
Area of port opening, a'.	1.23	1.86	2.58	2.592	1.86	0.426
Actual steam speed, V_s.	4070	5330	7310	10,260	16,620	29,800

[1] This ordinate was chosen by inspection and trial.

Raising the curve for 30% cut-off (Fig. 43) in the same manner and making the ordinates at $\theta = 22\frac{1}{2}°$ coincide by using a width of maximum port opening equal to $0.5 \times \frac{5200}{6600} = 0.394''$, or a nominal steam speed in equation [5] equal to

$$7000 \times \frac{6600}{5200} = 8880$$

gives the curve marked 30% in Fig. 44.

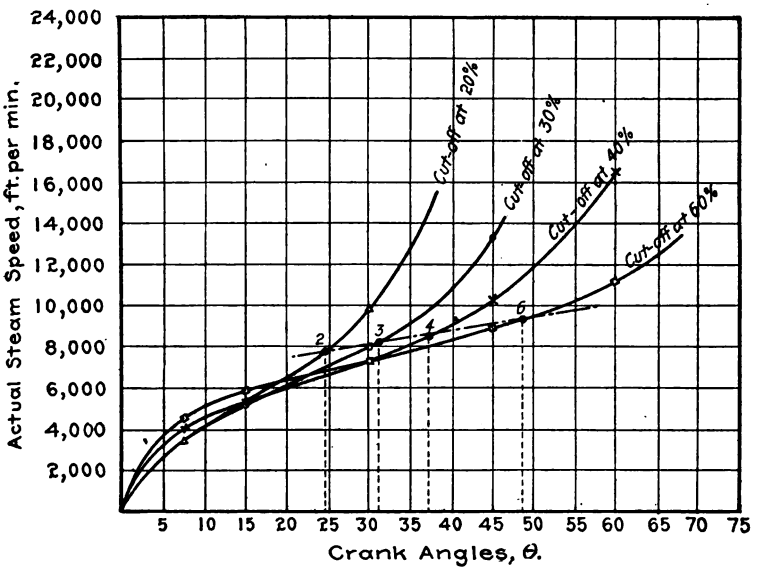

FIG. 44.

The curve marked 20% in Fig. 44 is obtained in a similar way by making the ordinates at $\theta = 20°$ in Fig. 43 coincide. This is equivalent to computing the maximum port opening from equation [5] with a nominal steam speed of $7000 \times \frac{6400}{4400} = 10{,}200$ which gives an opening 0.343″ wide.

The points marked 6, 4, 3, and 2 in Fig. 44 indicate the instant of maximum port opening and it is seen that the earlier cut-offs are favored by a lower steam speed.

Equation [4] is in a very simple and convenient form and will be used for computing maximum port openings. Instead of using the value 7000 for the nominal steam speed, however, this

figure will be made to depend upon the cut-off and chosen so as to give the curves of actual steam speed shown in Fig. 44. In developing these curves the nominal steam speeds were found to be

for the 20% cut-off curve..... 10,200 ft. per min.
for the 30% cut-off curve..... 8,880 ft. per min.
for the 40% cut-off curve..... 7,860 ft. per min.
for the 60% cut-off curve..... 7,000 ft. per min.

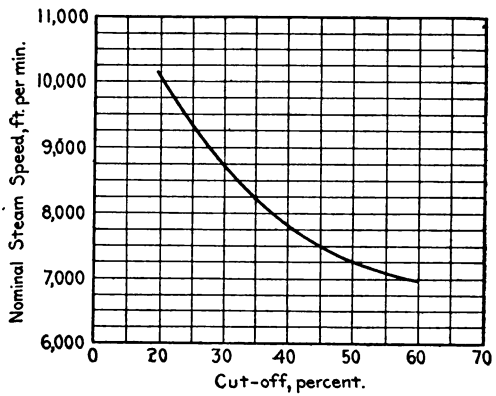

FIG. 45.

By plotting these values and drawing a smooth curve (see Fig. 45) the nominal steam speed to use in equation [4] for any cut-off is determined.

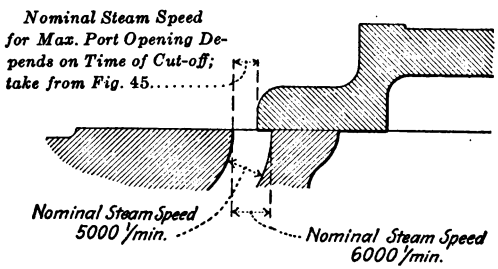

FIG. 46.

This curve is to be used only as a guide, no rigid rule can be given for steam speeds. The valve travel is always an important item and must be considered equally with the steam speed and the two adjusted to suit each particular case.

When the exhaust port opens, the cylinder is full of steam of

higher specific volume than when it entered. As soon as the port is opened there is a rush to the exhaust cavity and a large quantity of the steam escapes before the piston reaches the end of its stroke; what remains is pushed out by the piston on the return stroke. To insure ample passage for the exhaust steam and allow for the roughness and imperfections of castings the nominal steam speed through the cylinder ports is usually taken as 5000 ft. per minute. The edges of the ports in the valve seat are usually smoothed up and through these openings the speed may be taken as 6000 ft. per minute.

A summary of the results of this discussion is given in Fig. 46.

PROBLEM 12

Design a D-slide valve for a 10″ × 12″, 200 R.P.M. engine, having given the following data:

Initial steam pressure, 110 lb. gauge.
Back pressure, 2 lb. gauge.
Clearance volume, 9% on each end.
Length of connecting rod three times the stroke.
Admission on both ends to occur when the crank is 4° before the dead center position.
Head end cut-off at 50% of the stroke.
Head end compression at 79% of the stroke.
Crank end compression at 82% of the stroke.
Draw the valve and the probable indicator cards.

Solution.—The area of the piston is $\frac{\pi 10^2}{4} = 78.5$ sq. in.; the average piston speed is $\frac{2LN}{12} = \frac{2 \times 12 \times 200}{12} = 400$ ft. per minute; the nominal steam speed for 50 % cut-off is given in Fig. 45 as 7300 ft. per minute. Substituting these values in the expression given below (equation [4] reproduced) determines the maximum port opening.

Area port × nominal steam speed = area piston × avg. piston speed.

$$\text{Area port} = \frac{78.5 \times 400}{7300} = 4.3 \text{ sq. in.}$$

If the length of the port is assumed to be 3/4 the diameter of the cylinder, the length will be $3/4 \times 10 = 7.5''$ and the width of the maximum port opening $\frac{4.3}{7.5} = 0.574''$.

Bilgram Diagram (Fig. 47).—Take some length DD' to represent the stroke of the piston and on this as a diameter draw a circle to represent the path of the crank pin. Through the center, O, of this circle draw a pair of axes.

At an angle of 4° with the horizontal axis draw the crank positions for admission, OA and OA'.

The length DO is 50% of DD' and the piston has traveled from D to O when head end cut-off occurs. With the connecting rod length as a radius ($3 \times DD'$) and center on $D'D$ produced, scribe

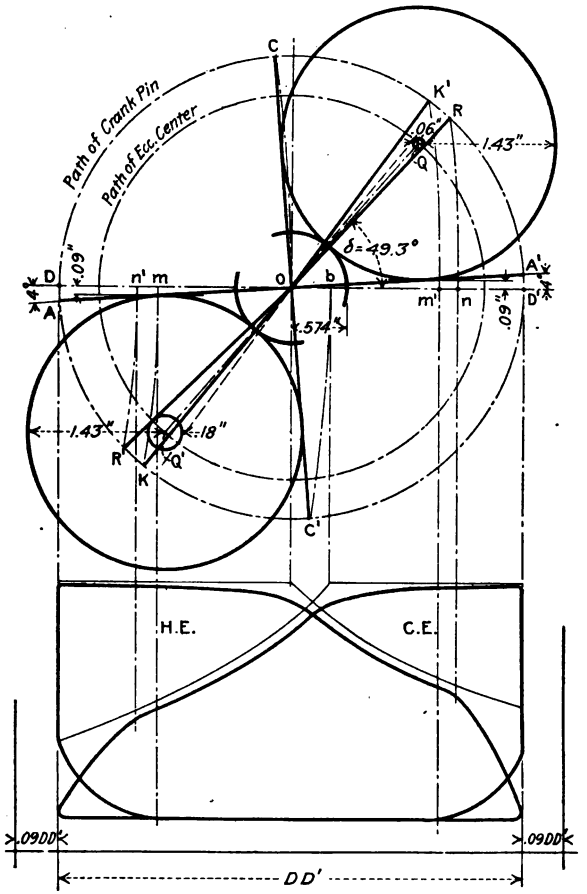

FIG. 47.—Bilgram diagram for Problem 12.

an arc through O cutting the crank pin circle at C and determining the crank position OC for head end cut-off.

With center at O and a radius equal to the maximum port opening, 0.574″, scribe the port opening arc.

Tangent to the port opening arc, to the crank position at cut-off (OC), and to the crank position at admission (OA produced—

which happens to fall on OA') draw the head end steam lap circle. Its radius measures 1.43″ and the angle of advance, δ, is 49.3°.

Lay off $D'm$ equal to 79% of $D'D$ and with the same radius as previously used to represent the connecting rod, scribe the arc mK and draw OK the crank position for head end compression.

With center at Q draw the head end exhaust lap circle tangent to OK produced. Its radius measures 0.06″.

The crank position for head end release, OR, is tangent to the lower side of the head end exhaust lap circle. By projecting R on an arc to the horizontal axis the corresponding piston position is located and $\frac{Dn}{DD'}$ gives the percent of the stroke at which release occurs.

$$\frac{Dn}{DD'} = 86\%.$$

Tangent to the head end steam lap circle and parallel to DD' draw the *lead* line. Its distance from the horizontal axis measures 0.09″.

Having determined the time of the four events for the head end, and having given the initial steam pressure and the back pressure the indicator card for that end can be drawn.

Following a similar construction for the crank end, locate Q' diametrically opposite Q and draw the crank end steam lap circle tangent to OA' produced. Its radius measures 1.43″ The line OC' tangent to the other side of the circle gives the crank position for crank end cut-off. Swing C' to the axis and determine the percent of cut-off.

$$\frac{D'b}{D'D} = 42\%.$$

Lay off Dm' equal to 82% of DD' and locate the crank position for compression (OK') by projecting m' on an arc to the crank pin circle.

Draw the crank end exhaust lap circle, the crank position for release, OR', and the lead line, in the same manner as for the head end.

Draw the crank end indicator card.

The Solution by the Zeuner Diagram is shown in Fig. 48.

To draw the valve and seat proceed as follows:

Draw a line to represent the valve seat (Fig. 49) and on it

locate a point x. Lay off $xx_2 = 1.43''$, the head end steam lap, as determined by the diagram. The width of the port xx_1 should be sufficient to limit the nominal speed of the exhaust steam to 6000 ft. per minute.

$$\frac{78.5 \times 400}{6000} = 5.23 \text{ sq. in.}$$

$$\frac{5.23}{7.5} = 0.698'' \text{ or say } 0.7'' \text{ width of port.}$$

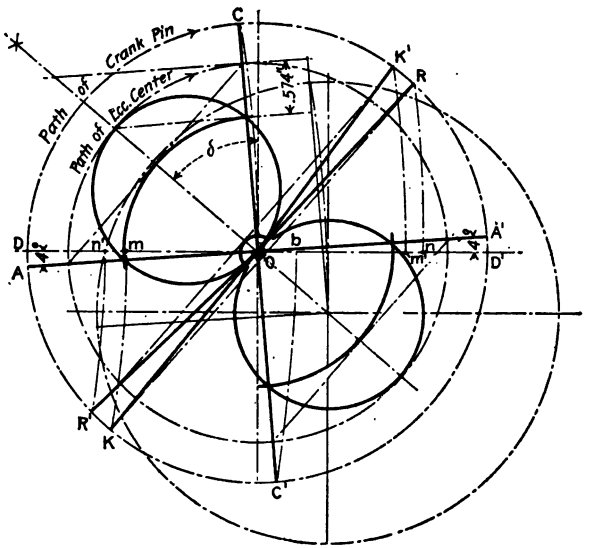

FIG. 48.—Zeuner diagram for Problem 12.

Multiplying the width of port opening for entering steam by the ratio of the nominal steam speeds gives the same result:

$$0.574'' \times \frac{7300}{6000} = 0.698'' \text{ say } 0.7''.$$

The wall between the cylinder port and the exhaust cavity is called the *bridge*. For this work the width of the bridge, t, may be chosen arbitrarily. It should be at least as thick as the cylinder walls and wide enough to give the valve a good bearing surface and prevent leakage of live steam into the exhaust when the valve is in its extreme position. In this problem it will be assumed 3/4″. When the valve is in either of its extreme positions

the inside edge closes off some of the exhaust cavity. Fig. 49 shows the valve dotted in the left hand extreme position. It is necessary to make the cavity wide enough so that there will remain sufficient passageway for the exhaust steam—in this problem 0.7″.

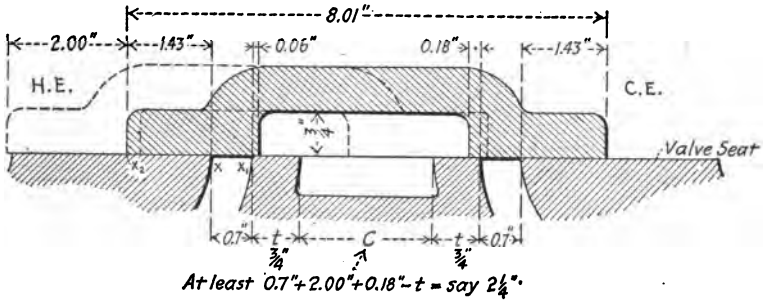

FIG. 49.

In Fig. 49

$$C + t = e' + r + 0.7''$$
$$C = e' + r + 0.7'' - t$$
$$= 0.18'' + 2.00'' + 0.7'' - 0.75'' = 2.13'' \text{ say } 2\tfrac{1}{4}''.$$

The expression shows that the larger exhaust lap should always be used in this computation.

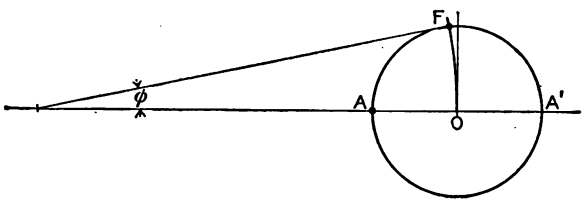

FIG. 50.—Angularity of connecting rod.

Draw the crank end cylinder port and the crank end of the valve with the laps determined by the diagram and finally fix the finished length of the valve seat so that the valve will not wear shoulders at the ends of its travel.

Angular Movement of Connecting Rod.—When the piston has moved forward to the middle of its stroke as from A to O in Fig. 50 the crank has not turned through 90° but only through the angle AOF. During the second half of the stroke of the piston

the crank pin moves from F to A'. Assuming the velocity of the crank pin to be uniform, the piston speed is greater during the first half of the forward stroke (A to O) than during the second half (O to A'). The amount of variation of the piston speed from the simple harmonic depends on the relative lengths of the crank and connecting rod or rather on the angle ϕ which the connecting rod makes with the line of stroke. This movement of the connecting rod through the angle bisected by the line of stroke is termed its *angular vibration*. Its angular position at any

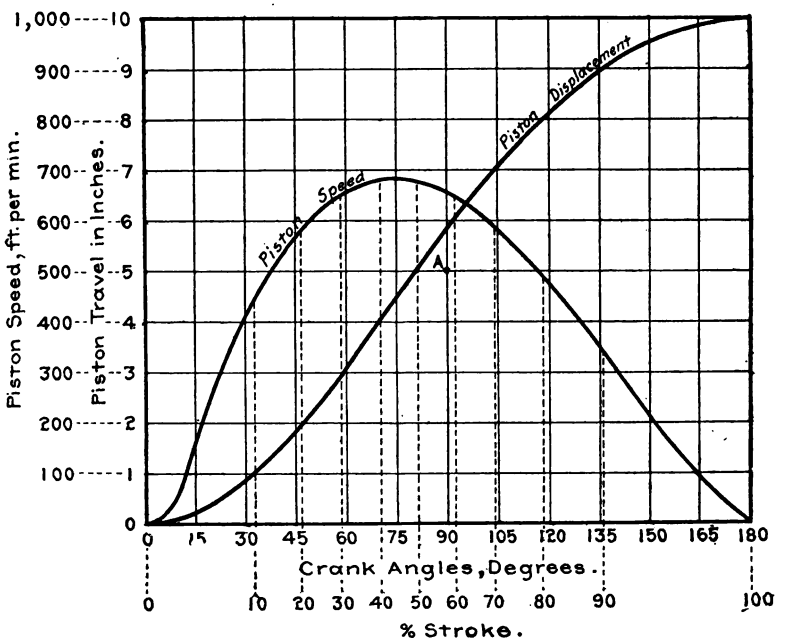

FIG. 51.

time is termed its *angularity* or *obliquity*. The effect of angularity is to draw the piston closer to the crank shaft than if ϕ were zero.

A curve of piston displacements for different crank angles is shown in Fig. 51. The ratio between connecting rod length and crank length used in this figure is 6 to 1 and the stroke of the engine is 10″. It will be noticed that the curve is not exactly symmetrical about the line 5 representing half stroke and that to be symmetrical it must pass through the point A.

TABLE 5.—STROKE TABLE.

Piston position (stroke = unity)	Crank angles (for ordinary connecting rods)					
	Ratio crank to connecting rod 1 to 5			Ratio crank to connecting rod 1 to 6		
	Forward	Return	Diff.	Forward	Return	Diff.
	Deg.	Deg.	Deg.	Deg.	Deg.	Deg.
0.025	16 5/8	20 1/4	3 5/8	16 7/8	19 7/8	3
0.05	23 5/8	28 1/2	4 7/8	24	28	4
0.075	29 1/8	35 1/4	6 1/8	29 1/2	34 5/8	5 1/8
0.10	33 3/4	40 3/4	7	34 3/8	39 7/8	6 1/2
0.125 = 1/8	37 7/8	45 5/8	7 3/4	38 1/2	44 3/4	6 1/4
0.20	48 3/4	58 1/8	9 3/8	49 1/2	57 1/4	7 3/4
0.25 = 1/4	55 3/8	65 3/8	10	56 1/4	64 3/8	8 1/8
0.30	61 1/2	72	10 1/2	62 3/8	71	8 5/8
0.333 = 1/3	65 3/8	76 1/4	10 7/8	66 1/4	75 1/4	9
0.375 = 3/8	70 1/4	81 3/8	11 1/8	71 1/8	80 1/4	9 1/8
0.40	73	84 1/4	11 1/4	73 7/8	83 1/4	9 3/8
0.45	78 5/8	90	11 3/8	79 5/8	88 7/8	9 1/4
0.50 = 1/2	84 3/8	95 5/8	11 3/8	85 3/8	94 5/8	9 1/4
0.55	90	101 3/8	11 3/8	91 1/8	100 3/8	9 1/4
0.60	95 3/4	107	11 1/4	96 3/4	106 1/8	9 3/8
0.625 = 5/8	98 5/8	109 3/4	11 1/8	99 3/4	108 7/8	9 1/8
0.65	101 3/4	112 5/8	10 7/8	102 3/4	111 3/4	9
0.666 = 2/3	103 3/4	114 5/8	10 7/8	104 3/4	113 3/4	9
0.68	105 1/2	116 1/4	10 3/4	106 1/2	115 3/8	8 7/8
0.70	108	118 1/2	10 1/2	109	117 5/8	8 5/8
0.71	109 3/8	119 3/4	10 3/8	110 3/8	118 7/8	8 1/2
0.73	112	122 1/8	10 1/8	113	121 3/8	8 3/8
0.75 = 3/4	114 5/8	124 5/8	10	115 5/8	123 3/4	8 1/8
0.76	116 1/8	125 7/8	9 3/4	117	125 1/8	8 1/8
0.77	117 1/2	127 1/4	9 3/4	118 1/2	126 1/2	8
0.78	119	128 1/2	9 1/2	120	127 3/4	7 3/4
0.79	120 1/2	129 3/4	9 1/4	121 3/8	129	7 5/8
0.80	121 7/8	131 1/8	9 1/4	122 7/8	130 1/2	7 5/8
0.81	123 1/2	132 1/2	9	124 3/8	131 3/4	7 3/8
0.82	125	133 3/4	8 3/4	126	133 1/8	7 1/8
0.83	126 5/8	135 1/8	8 3/4	127 1/2	134 1/2	7
0.84	128 1/4	136 3/4	8 1/2	129 1/4	136	6 3/4
0.85	130	138 1/4	8 1/4	130 3/4	137 1/2	6 1/2
0.86	131 5/8	139 3/4	8 1/8	132 1/2	139	6 1/2
0.87	133 1/2	141 1/4	7 3/4	134 1/4	140 5/8	6 3/8
0.875 = 7/8	134 3/8	142 1/8	7 3/4	135 1/4	141 1/2	6 1/4
0.88	135 1/4	142 7/8	7 5/8	136 1/4	142 3/8	6 1/8
0.89	137 1/4	144 1/2	7 1/4	138	144	6
0.90	139 1/4	146 1/4	7	140 1/8	145 5/8	5 1/2
0.91	141 3/8	148	6 5/8	142 1/8	147 1/2	5 3/8
0.92	143 5/8	149 7/8	6 1/4	144 3/8	149 3/8	5
0.93	146	151 7/8	5 7/8	146 5/8	151 1/2	4 7/8
0.94	148 1/2	154	5 1/2	149 1/8	153 5/8	4 1/2
0.95	151 1/2	156 3/8	4 7/8	152	156	4
0.96	154 1/4	158 7/8	4 5/8	154 3/4	158 5/8	3 7/8
0.97	157 3/4	161 3/4	4	158 1/4	161 1/2	3 1/4
0.98	161 7/8	165 1/8	3 1/4	162 1/4	164 7/8	2 5/8
0.99	167 1/8	169 1/2	2 3/8	167 3/8	169 3/8	2

Overtravel.—Valves are sometimes made to overtravel the cylinder port so that in the extreme position the valve stands as shown in Fig. 52. The valve could give a maximum port opening equal to G inches but the width (p) of the port is sufficient for the passage of the steam.

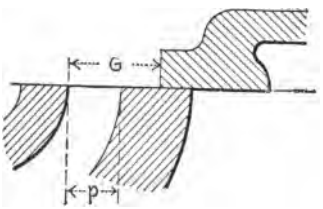

FIG. 52.—Overtravel.

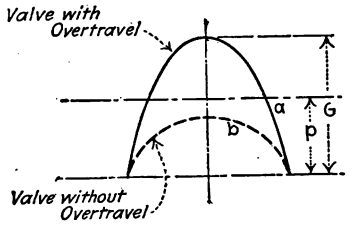

FIG. 53.—Valve displacement curves.

The displacement of the valve from its admission position plotted against intervals of time as abscissæ gives the curves shown in Fig. 53. Rapid opening and closing of the valve will produce lines at the sides of the half ellipse which are more nearly vertical than when the action is sluggish. Consequently such curves offer a satisfactory means of comparing different valves.

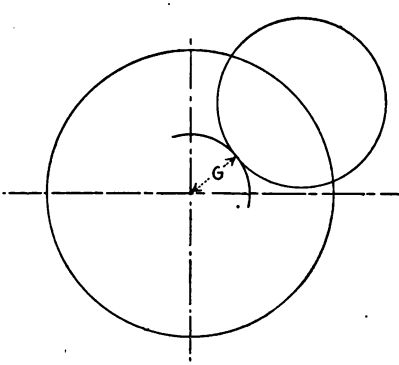

FIG. 54.—Bilgram diagram.

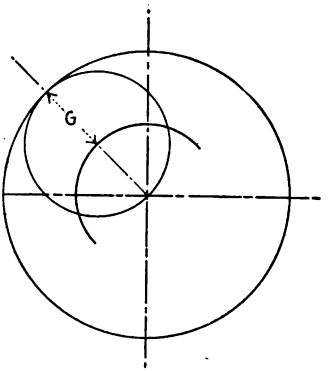

FIG. 55.—Zeuner diagram.

The purpose of overtravel is to produce a quick valve action by obtaining valve curves as shown by a in Fig. 53. Without overtravel the curve is similar to b. Whether the valve is made to overtravel or not, the distance G in Figs. 54 and 55 is the distance from the farthest edge of the port to the edge of the valve when the valve is widest open.

PROBLEM 13

Given.—Head end steam lap, $1\frac{3}{8}''$
Crank end steam lap, $1\frac{3}{8}''$
Angle of advance, 50°
Width of cylinder port, $\frac{3}{4}''$.
Eccentricity, 2″
Head end exhaust lap, $\frac{1}{16}''$
Crank end exhaust lap, $\frac{1}{8}''$.

Draw the diagram for the valve (either Zeuner or Bilgram), show the steam distribution by indicator cards, test for overtravel, and for completeness of opening for both inlet and exhaust.

CHAPTER V

FORMS OF SLIDE VALVES

Piston Valves.—There are two general types of slide valves —*flat* valves and *piston* valves. Each type is represented by many different styles.

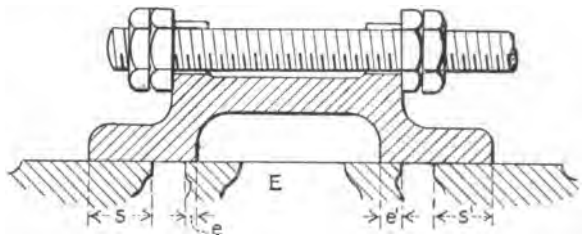

FIG. 56A.

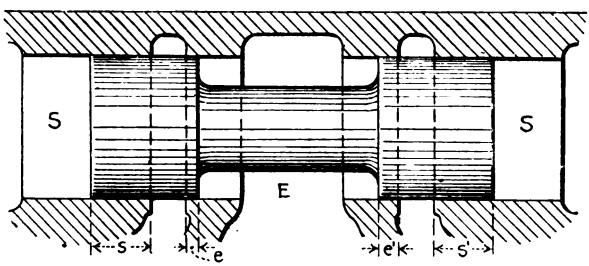

FIG. 56B.

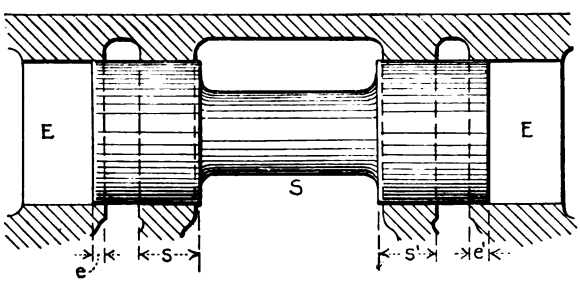

FIG. 56C.

The D-shaped valve shown in Fig. 56A is the simplest form of the flat slide valve. If the D valve is rolled up into the form of a cylinder it becomes the simplest form of piston valve (Fig. 56B).

Usually with flat valves the live steam surrounds the valve and the exhaust passes into the cavity *E* (Fig. 56A) while with piston valves (Fig. 56C) the live steam enters the cavity *S* and the exhaust passes out at the ends of the valve to chambers *E–E*.

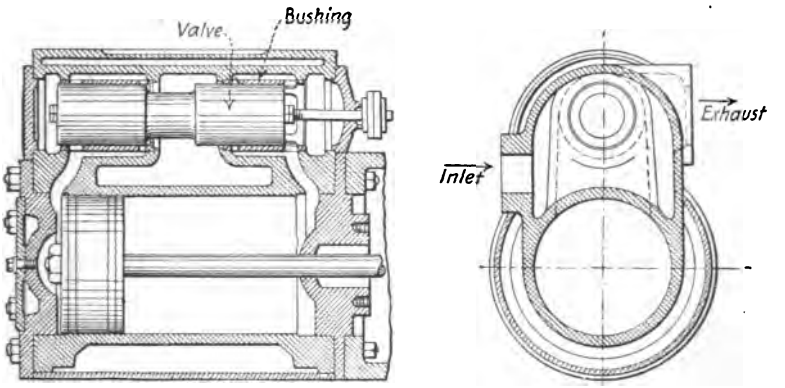

FIG. 57.—Cylinder and valve of Ideal engine.

The steam and exhaust laps for the two cases are shown in the figure.

Piston valves are extensively used in marine work. They are also used on locomotives and on stationary high speed engines.

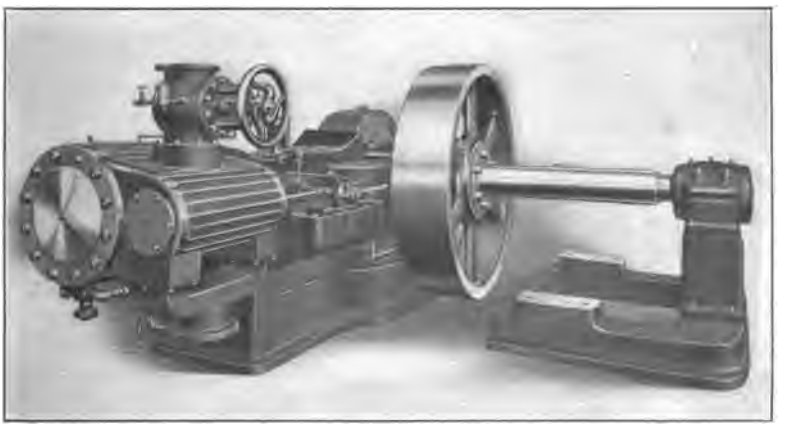

FIG. 58.—Ideal engine.

An example of the last mentioned application is given in Fig. 57, which shows the cylinder, valve and valve chest of the Ideal Engine, built in Springfield, Ill. Steam enters past the *inside*

edges of the valve and exhausts past the *outside* edges. The exhaust passes out from either end of the steam chest into a Y-shaped casting and then to the exhaust pipe as shown in Fig. 58. The valve and bushings are shown in Fig. 59.

A common form of locomotive piston valve is shown in Fig. 60 with a few dimensions marked to give an idea of the size and proportions. The two end pieces and the central body are held together by the valve rod. Each end piece secures a bull-ring which carries two spring rings. These rings are turned to a larger diameter than the bore of the valve cylinder and are then split so that they can be sprung into place. They form the working faces at each end of the valve. Any wear allows the rings to automatically spring out and keep the valve tight.

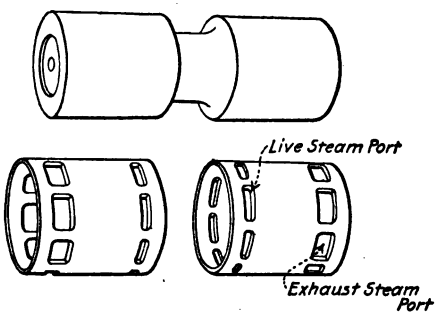

FIG. 59.—Piston valve and bushings.

Some idea of the form of the cylinder casting for a locomotive with a piston valve may be obtained from Fig. 61. Particular attention is called to the grid-bushings inserted at each cylinder port, and to the form of the passageways leading the exhaust to the base of the stack.

The *advantages* of the piston valve are:

1. It is perfectly balanced against steam pressure.
2. It is light.
3. By taking steam inside, it relieves the valve rod stuffing box and the valve chest end plates of high pressure steam so that they are easily kept steam tight.

The *disadvantages* are:

1. It gives larger clearance than a flat valve.
2. It usually requires a rather complicated cylinder casting.
3. Any wear results in increased leakage unless the valve is made with spring rings or some other means of adjustment.

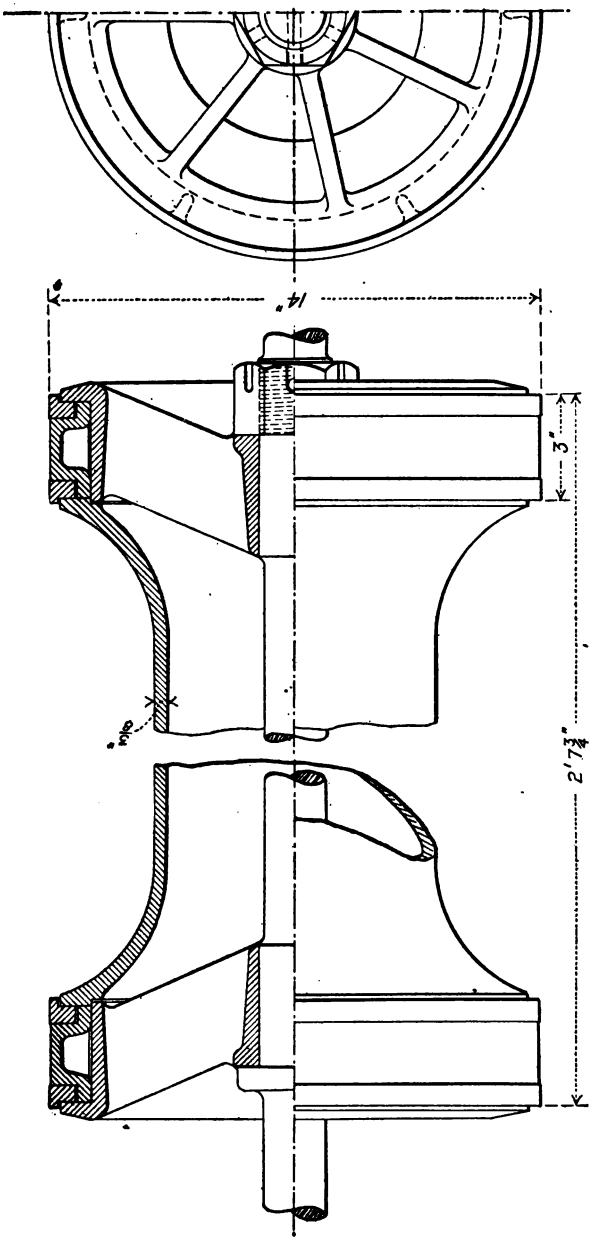

FIG. 60.—Locomotive piston valve for 28" × 30" engine.

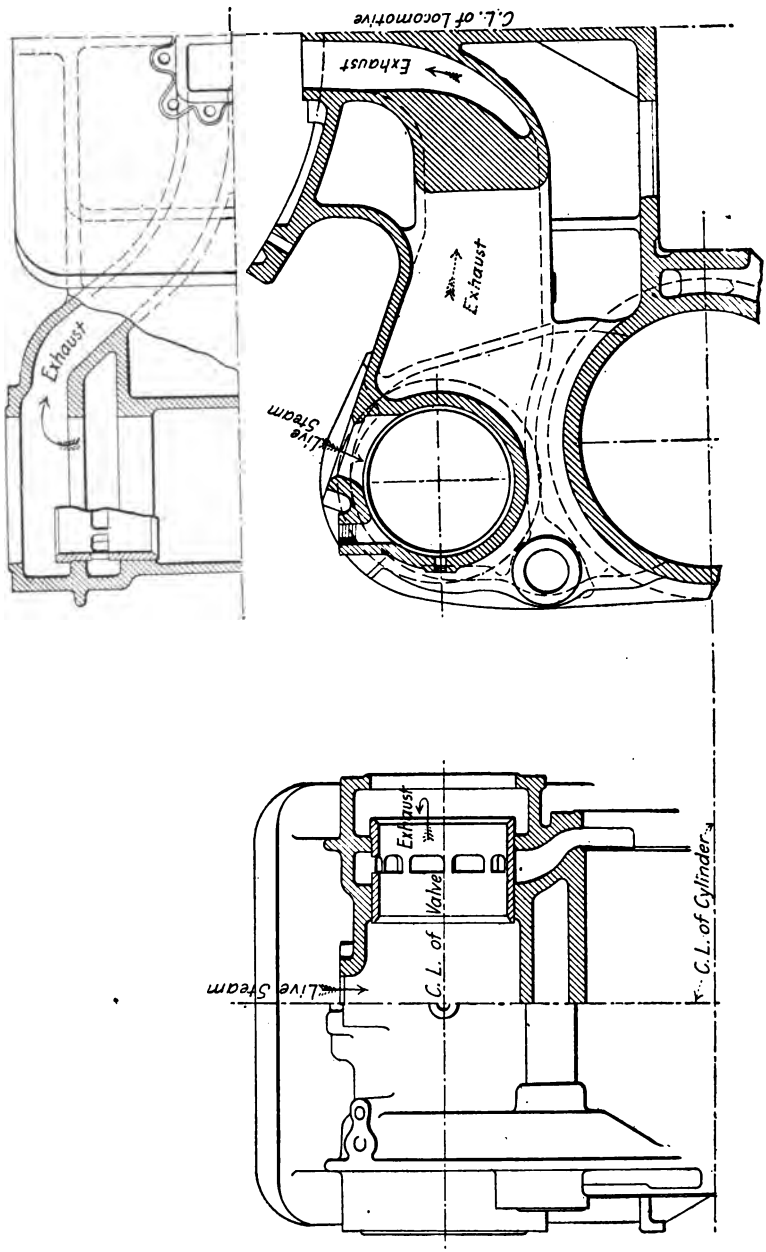

FIG. 61.—Locomotive cylinder casting.

With an *outside* admission valve, when the crank is in the head end admission position as shown in Fig. 62, the eccentric is at *a* and the valve is to the *right* of its mid-position the distance *O a''*. With an *inside* admission valve, when the crank is in the head end admission position (Fig. 63) the eccentric is at *a* and the valve is to the *left* of its mid-position the distance *O a''*. This does not affect the construction of the valve diagram.

The terms *direct* and *indirect* are often used as synonymous with *outside* and *inside* admission. A *direct valve* is one having live steam at the two ends and exhaust between (see Figs. 56A and 56B). An *indirect valve* is one having exhaust steam at the two ends and live steam between (Figs. 56C and 57).

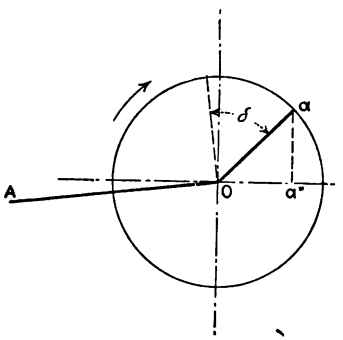

FIG. 62.—Outside admission.

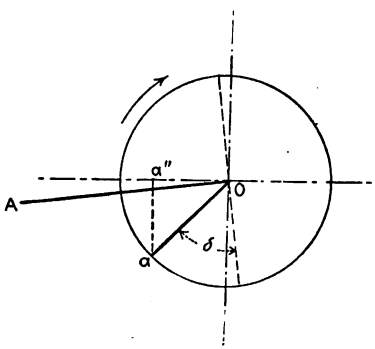

FIG. 63.—Inside admission.

Fig. 64 shows the relative positions of the *crank, eccentric* and *valve* of an engine equipped with an *outside admission* valve and turning *over*. Below it is another figure (Fig. 65) showing an engine with the eccentric set to turn *over* but with an *inside admission* valve. Figs. 66 and 67 are similar to the ones mentioned above except that the engine in both cases is shown to turn *under*. To the right, small valve diagrams are drawn to show the location of the valve circles in the different cases.

Multiple Ported Valves.—In all the problems which have been discussed, only the D or the simple piston valve has been considered. Inspection of the figures on pages 50 and 53 shows that if a D-slide valve is used for early cut-offs the steam laps and the valve travel become very large so that a large, clumsy valve results. Usually, too, a valve of this kind has full steam pressure

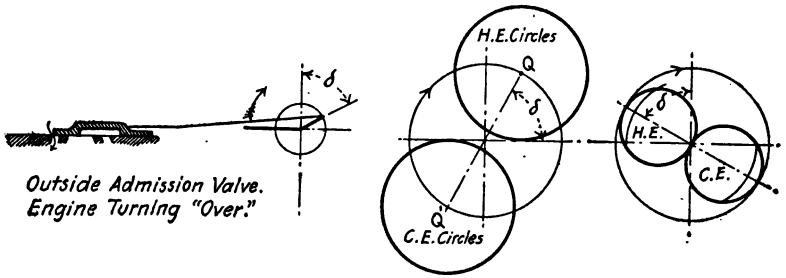

FIG. 64.

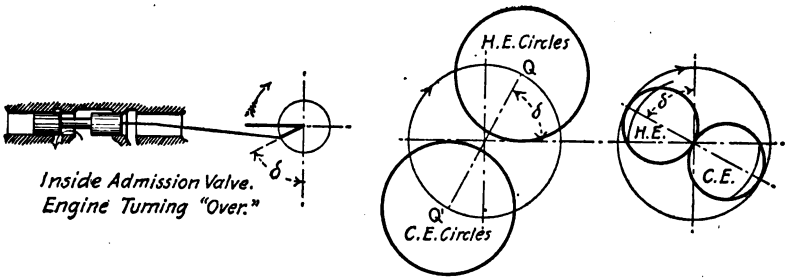

FIG. 65.

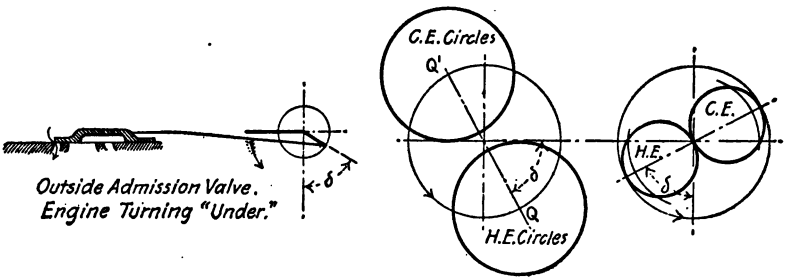

FIG. 66.

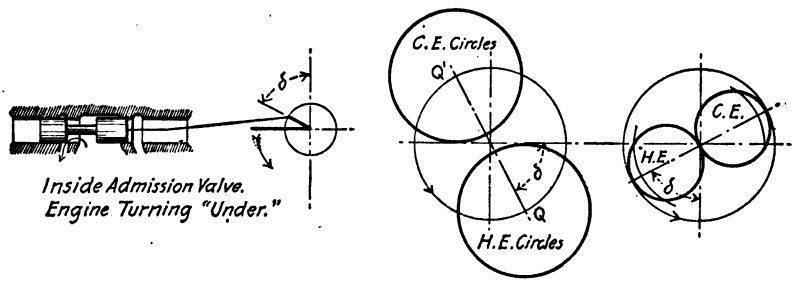

FIG. 67.

on its entire back, pressing it against its seat and making it hard to move. As the cut-off is made earlier, the angle of advance becomes larger and the opening and closing of the cylinder port more sluggish. These disadvantages practically prohibit the use of the D-slide valve for early cut-offs.

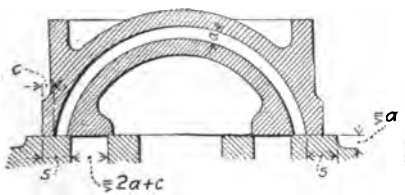

FIG. 68.—Allen valve in mid-position.

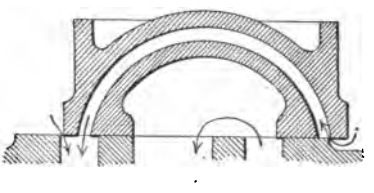

FIG. 69.—Allen valve admitting steam.

To reduce the valve travel, more than one passage for the entering steam can be provided. The Allen valve shown in Figs. 68 and 69 is an example of a *double* ported valve. Fig. 68 shows the valve in mid-position and Fig. 69 shows it moved to the right and steam entering the cylinder.

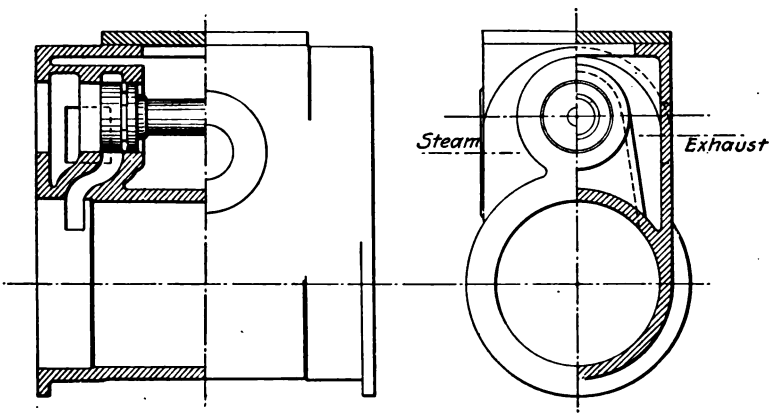

FIG. 70.—Double-ported piston valve.

Certain relations between the dimensions of the valve and seat must exist for the two steam passages to open at the same time. It will be seen that this valve gives two openings to steam for the same amount of movement that the plain valve requires to give one opening. Or, in other words, a double-ported valve gives the same opening to live steam as a single-ported valve, with only half the movement.

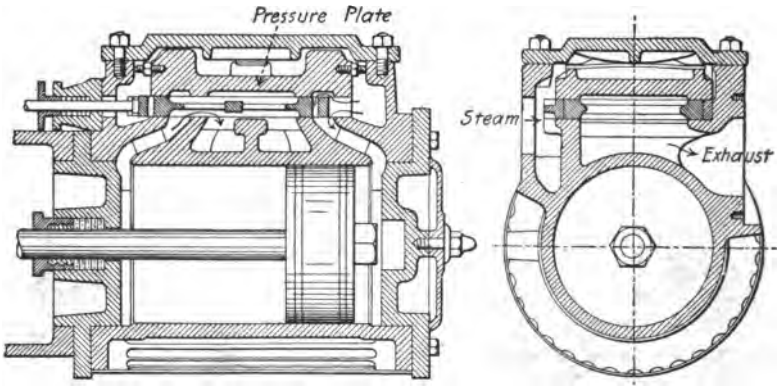

FIG. 71.—Sections through Ball engine cylinder.

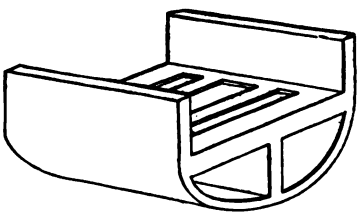

Pressure plate.

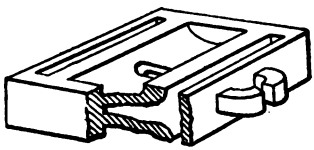

Four-ported valve.

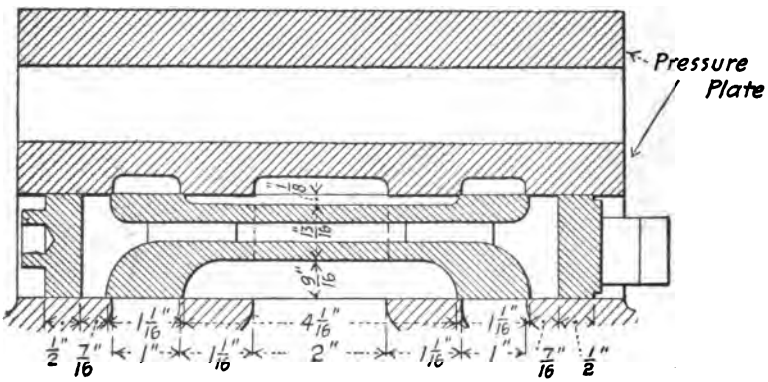

FIG. 72.—Four-ported valve and pressure plate.

The Allen idea has been applied to piston valves as illustrated by the indirect, double-ported valve shown in Fig. 70.

The cylinder and valve of the Ball engine built in Erie, Pa., are

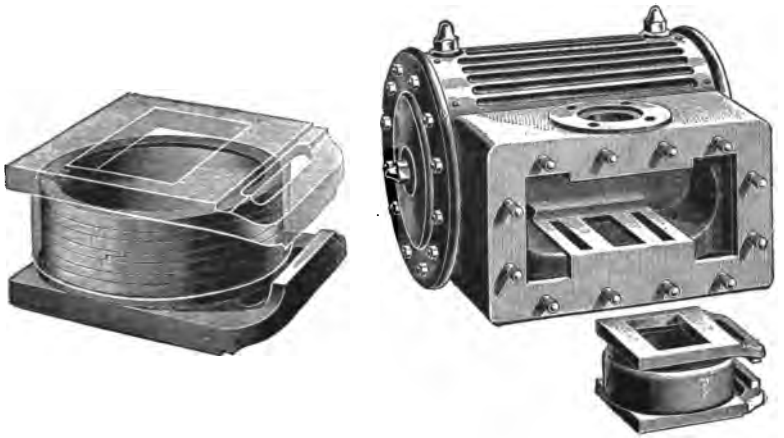

FIG. 73.—Ball and Wood telescopic valve. Double-ported, inside admission.

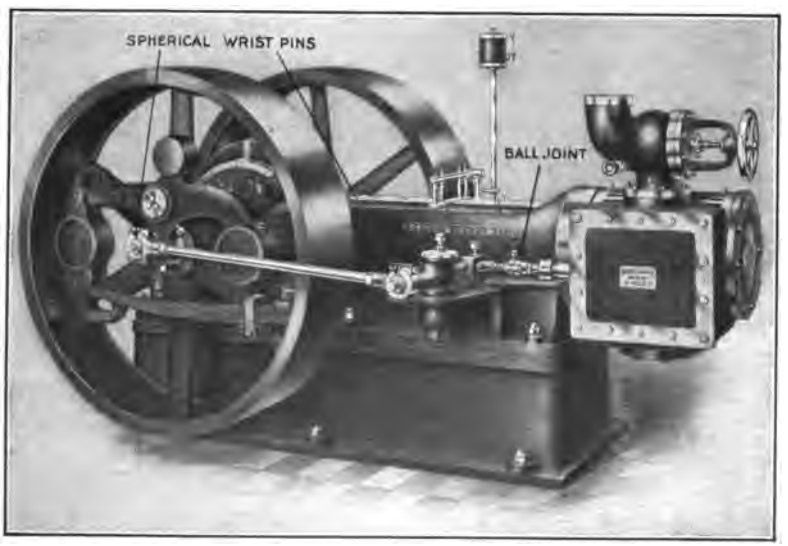

FIG. 74.—Skinner simple engine.

shown in Fig. 71. Valves of this type are known as *double-ported flat valves.*

Flat valves can be made *four-ported* as illustrated in Fig. 72.

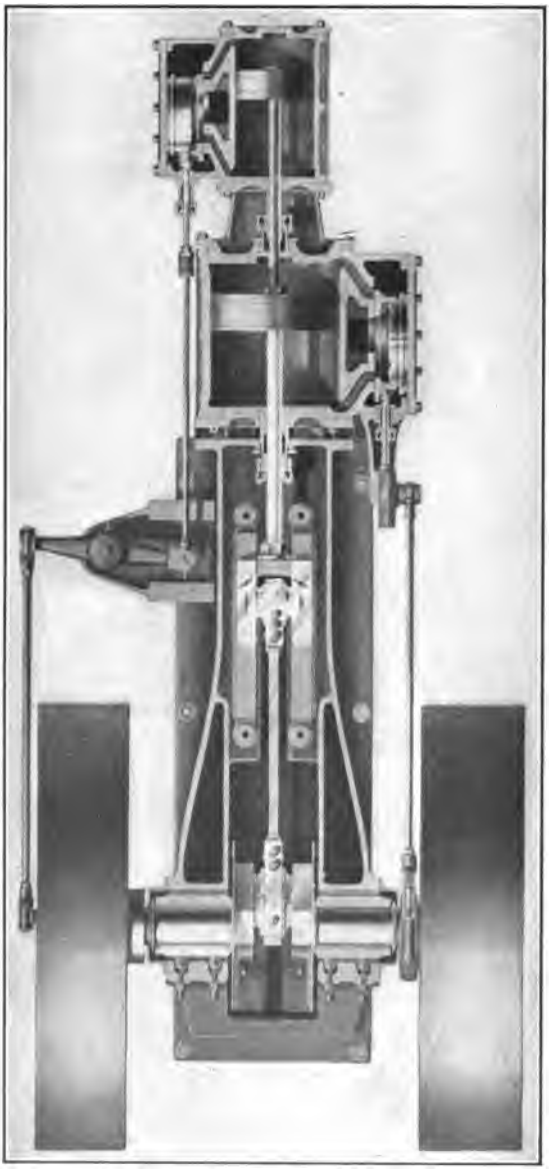

FIG. 75.—Section of Skinner compound engine.

Four-ported valves require only one-quarter the movement of single-ported valves to give the same amount of port opening.

The purpose of the *pressure plate* used with these valves is to reduce the friction of the valve by relieving the pressure on its back. The recesses in the pressure plate form part of the passage-way for the steam.

A flat valve working under a pressure plate possesses some of the desirable features of the piston valve with the additional advantage of easier repair after it has become worn and leaky. To take up wear it is only necessary to plane off the face of the valve and then reduce the distance pieces which hold the pressure plate off the valve until a working fit is obtained.

A double-ported telescopic valve made by the Ball and Wood Engine Company of Elizabeth, N. J., is shown in Fig. 73; this

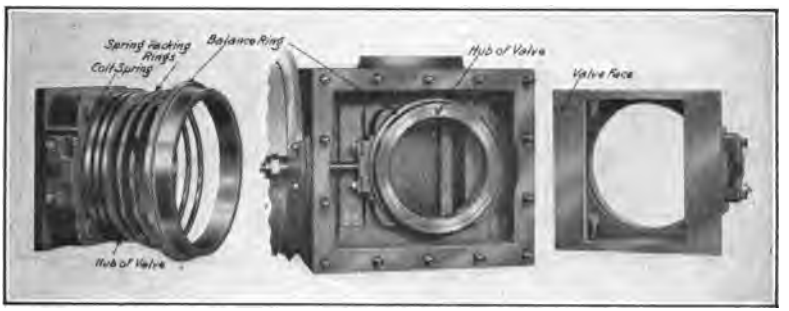

FIG. 76.—Skinner engine valve.

valve is made in two parts, one fitting snugly within the other. Steam enters through the top of the valve and tends to separate the two parts thus keeping them pressed firmly on the seats, reducing leakage and taking up wear. The objections to this valve, in addition to the fact that it is not balanced, are its size, the large cylinder clearance due to the complex ports, and the difficult cylinder casting.

Summary.—The travel of a valve may be reduced by increasing the number of passages for the steam.

The friction of the valve may be reduced by balancing the steam pressure on the valve.

Both of these reductions reduce the stresses on the gear.

Exercise.—Consulting any available references, draw and

describe the action of some slide valve and gear not described in this book.

Skinner Engine Valve.—Fig. 74 shows the Skinner simple engine, Fig. 75 a longitudinal section of the Skinner compound engine and Fig. 76 the valve. As far as steam distribution is concerned the action of the valve is similar to that of a D-slide valve but the Skinner valve is made in two parts, one pressing against the valve seat and the other against the valve chest cover. About 80% of the surface of the valve is thus relieved of steam pressure. The portion in contact with the cover is called the *balance ring* and is pressed against the cover by coil springs. Leakage between the ring and the hub of the valve is prevented by spring packing rings.

Location of Ports in the Valve Seat.—Friction and weight are important considerations in all valve gear work. It requires work to move the valve against friction, and work to accelerate and retard the moving masses. The greater the forces acting, the greater will be the wear and tear on the gear.

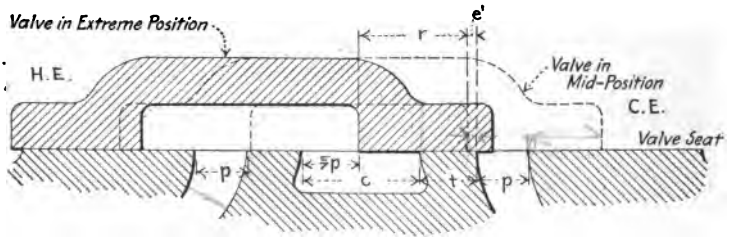

FIG. 77.

The D-slide valve usually has steam pressure over its entire back and the friction and weight are proportional to the size of the valve. It is advisable therefore to make the valve small and this requires the ports in the valve seat to be as close together as practicable. When the valve is in its extreme position the exhaust passage must not be cramped, otherwise the back pressure will cause a loss of effective work. The minimum value of the dimension c in Fig. 77 will leave a passage p inches wide for the exhaust when the valve is in its extreme position, p being the width of the cylinder port through which the exhaust passes. Making the ports in the valve seat as close together as possible, or in other words making the dimension c a minimum, results in

long passageways in the cylinder and large clearance space; this, however, is regarded as the lesser of two evils.

Balanced valves have not the disadvantage of large friction due to steam pressure but they produce inertia forces. For such valves the distance *c* is increased so as to reduce the clearance. It then becomes a matter of judgment how much to reduce the clearance by increasing the size and weight of the valve. Ideas regarding the practice in proportioning the valve and ports can be obtained by observing modern engines of standard make.

FIG. 78.—Slider on Ideal engine.

Sliders and Rockers.—Many different styles of connections

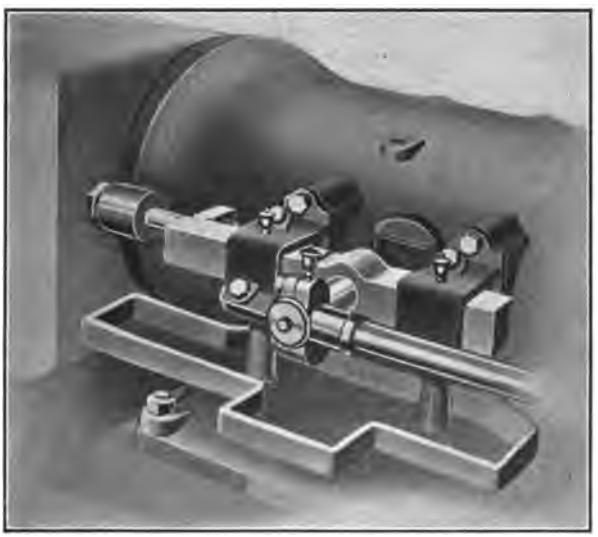

FIG. 79.—Typical slider connection.

are used between the eccentric rod and the valve stem on slide valve engines but all can be grouped under the general types:

(a) Sliders.
(b) Rockers.

Characteristic examples of slider connections are shown in Figs. 78 and 79. Representative rocker connections are shown in Figs. 74, 75 and 80. Rockers are used whenever the line of action of the valve rod is at a considerable distance from that of the eccentric

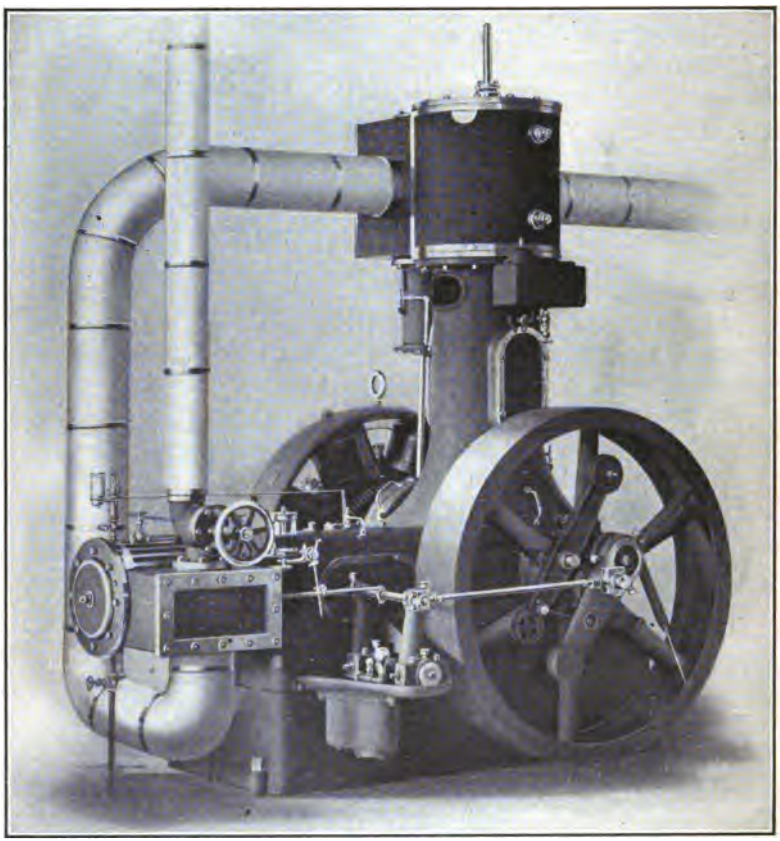

FIG. 80.—Angle compound engine. (*American Engine & Electric Co.*)

rod, as when the eccentric connection is placed outside of the flywheel. The practice of locating the governor and valve gear outside of the flywheel, where the parts are all accessible, has become very common in recent years.

CHAPTER VI

SHAFT GOVERNORS

All engine governors are constructed so that certain forces are in equilibrium at the desired or normal speed of rotation and a disturbance of this equilibrium, due to a change of speed, causes the governor to readjust itself. The motion of the governor in assuming its new position alters the steam distribution so that the speed returns to normal and the governor to its standard position.

The practical application of the shaft governor dates back to about 1875 and since that time its development in this country has been rapid. In England and continental Europe its use is much more limited.

Shaft governors rotate with the flywheel in a plane perpendicular to the axis of the shaft. The position of the governor is dependent on centrifugal and inertia forces acting in opposition to the pull of one or more springs attached to the wheel on which the governor is mounted.

In all forms of shaft governors the eccentric is under absolute control of the governor; it is fastened to the governor so that any movement of the latter causes a displacement of the eccentric center. This shifting of the eccentric results in a change in the cut-off, thus proportioning the supply of steam to the load. Equilibrium exists only at a certain fixed speed and that speed can be altered by varying the spring tension or the weights of the governor. Additional weight causes the engine to run slower; tightening the spring will speed it up. A combined change may not affect the average speed but will affect the regulation.

The movement of the governor may cause

(*a*) A change in the angle of advance.

(*b*) A change in both the angle of advance and the radius of the eccentric.

The latter is much more common.

Shaft governors may be divided into two classes:

(*a*) Centrifugal governors.

(*b*) Inertia governors.

These classes have been named after the predominant force acting to move the governor. In all centrifugal governors there are some inertia forces, and in all inertia governors some centrifugal forces, acting on the movable parts. As examples of the first class the Westinghouse governor, illustrated in Fig. 81, and the Buckeye governor (Fig. 82) have been chosen.

Westinghouse Governor (Fig. 81).—In the Westinghouse governor a disk, *A*, on the engine shaft serves as a support for the governor parts; this disk may be replaced by the ordinary flywheel. The weights, *BB*, are pivoted to the disk at *b* and *b*.

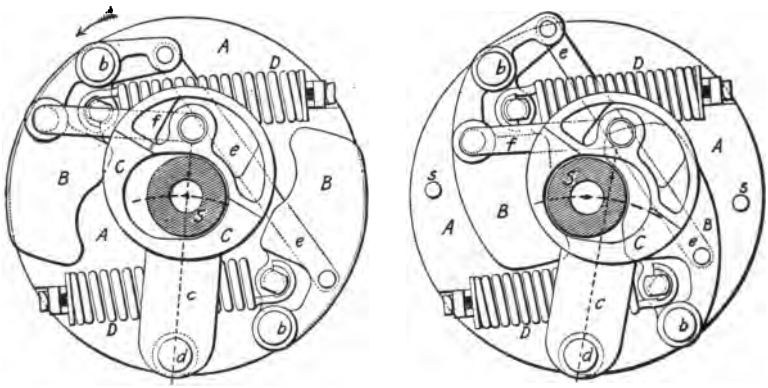

FIG. 81.—Westinghouse governor.

The eccentric, *C*, is rigidly connected to the arm *c*, which is pivoted to the disk at *d*. Springs *DD* are attached at one end to the weights *BB*, and at the other (by a lug bolt) to the disk *A*. The long link, *e*, connects the two weights in such a way that they always move together. The short link, *f*, is attached at one end to the eccentric and at the other to one of the weights so that as the weights move out, the eccentric moves across the shaft. Stop pins, *ss*, limit the outward travel of the weights.

The direction of rotation is shown by the arrow. The distance from *d* to the center of the eccentric is greater than the distance from *d* to the center of the shaft by an amount approximately equal to the lap of the valve. As the eccentric is drawn toward the right from the position shown in the left-hand figure its center is moved farther from the center of the shaft, the valve travel is increased and the angle of advance is decreased. The increased

valve travel combined with the decreased angle of advance causes a later cut-off without materially altering the point of admission.

Buckeye Governor (Fig. 82).—The Buckeye governor is somewhat similar to the Westinghouse, the main difference being that as the weights move out the eccentric sheave is rotated about the shaft center *O*. This varies the angle of advance but not the eccentricity.

An essential feature in both these governors is that the weight arms are pivoted on a diameter and connected in such a manner that their movement with respect to the shaft center is symmetrical, thus securing revolving balance.

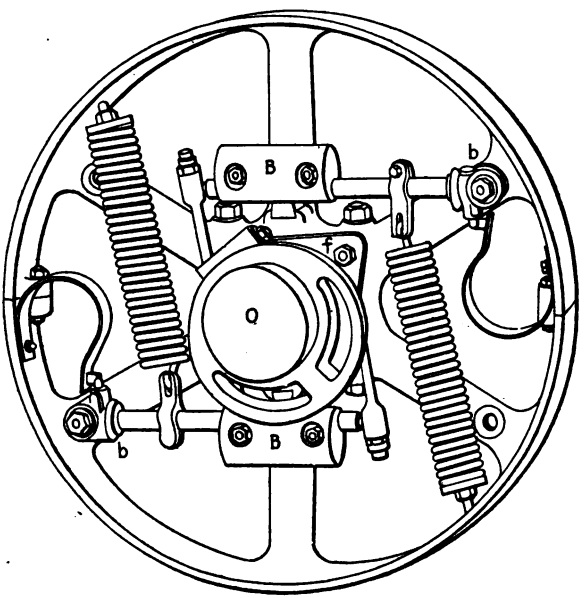

FIG. 82.—Buckeye governor.

Inertia forces which are necessarily present in centrifugal governors may have considerable effect on the action of the governor. If the governor parts are so arranged that the inertia force acts to assists the centrifugal force, the action of the governor is made quicker. The direction of the principal inertia forces for the extreme positions of the Westinghouse and the Buckeye governors are shown in Fig. 83. It is noticed that they pass very close to the pivots so that their turning moments are

small, less in the case of the Buckeye than the Westinghouse. This torque in the Buckeye is negative for some positions and hinders the action of the governor.

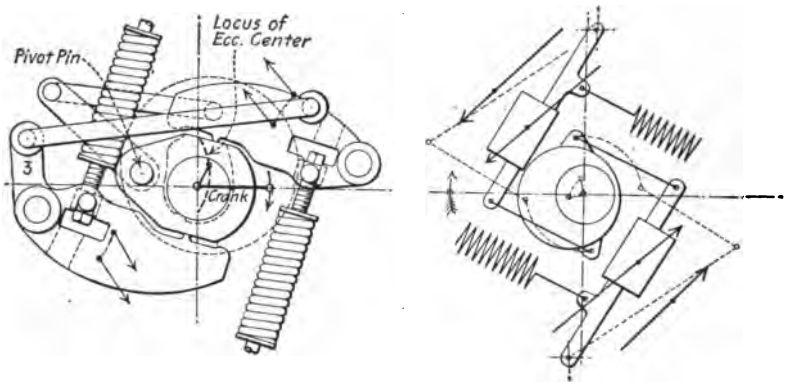

Westinghouse governor Buckeye governor

FIG. 83.—Directions of principal inertia forces.

Rites Governor.—The governor shown in Fig. 84 was invented by Mr. F. M. Rites and is very extensively used on high speed engines. It illustrates, admirably, the inertia type of governor.

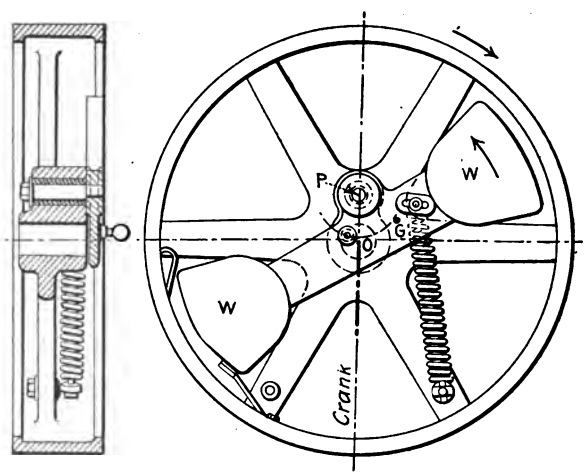

FIG. 84.—Rites inertia governor.

A heavy arm with weights at the ends is pivoted to the flywheel at the point *P*. The center of gravity of the entire mass is at *G* and the centrifugal force of the entire mass, imagined concentrated

at the point G, causes the governor to assume a certain position limited by the pull of the spring. Should the engine tend to slow down, due to increased load, the inertia of the mass of iron causes the arm to rotate about the point P and shift the eccentric so that the cut-off is made later. More steam is thus admitted per stroke. If the engine should tend to speed up, due to decreased load, the arm would lag behind the shaft and turn about the pivot P, so that the cut-off would occur later.

Robb-Armstrong Governor.—In the Robb-Armstrong governor, illustrated in Fig. 85, the centrifugal force is high and to this is added a powerful linear inertia.

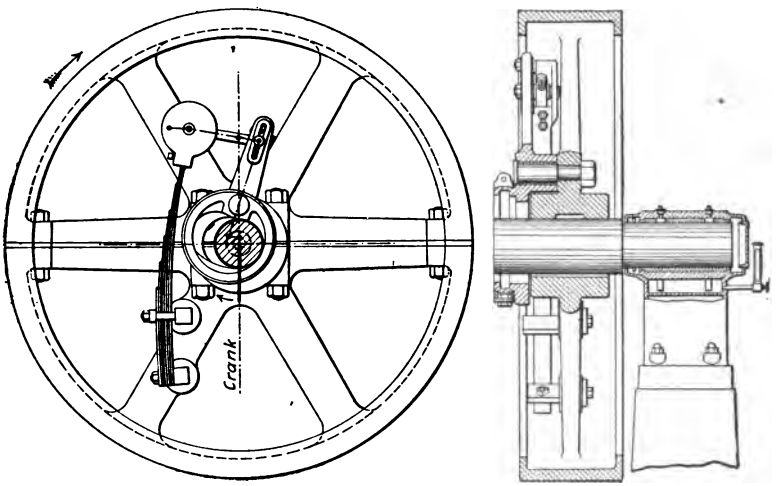

FIG. 85.—Robb-Armstrong governor.

Both the Rites and the Robb-Armstrong governors change the eccentricity and the angle of advance of the eccentric. The center of the eccentric will lie somewhere along the path indicated in the figures, there being a definite position corresponding to every load on the engine.

In the problems which have been considered, a constant cut-off was assumed. This is the case only with an engine running at uniform load or equipped with a throttling governor. It therefore becomes necessary to investigate the method of applying the valve diagrams to valve gears operated by a shaft governor. Since this governor controls the engine speed by changing the point of cut-off, it is often called the "automatic cut-off governor."

With an outside admission valve and a fixed eccentric keyed to the shaft, when the crank is at OD (Fig. 86) the eccentric is at some position such as OE, $90° + \delta$ ahead of the crank, and these relative positions of the parts remain unchanged.

With an eccentric not keyed to the shaft, but fastened to and controlled by a shaft governor, E is not fixed with relation to OD. When the governor adjusts itself to the speed the position of E is changed. Assume, for illustration, that the eccentric is pivoted to the flywheel at the point P (Fig. 86) and that the crank is held stationary at OD. By moving the governor from one extreme

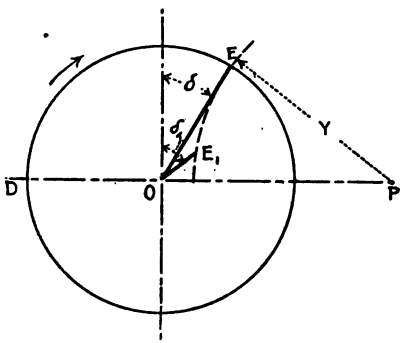

Fig. 86.

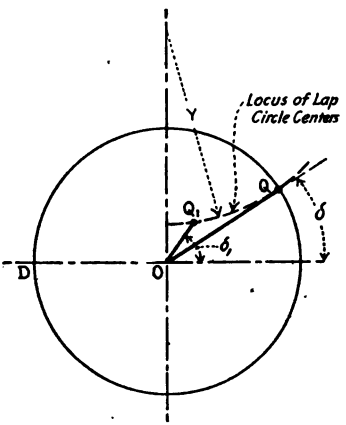

Fig. 87.

position to the other, the eccentric center may be made to occupy any position on the arc through E, drawn with P as a center. The engine may run for a time with the angle of advance δ and the eccentricity OE; then a change in the load may increase the speed, causing the governor to readjust itself and change the angle of advance to δ_1 and the eccentricity of OE_1.

On the Bilgram diagram this change in the position of the eccentric is shown by a change in the location of the lap circle center. Corresponding to the eccentricity OE the lap circle center is at Q (Fig. 87); a change in eccentricity to OE_1 (Fig. 86) shifts the lap circle center to Q_1 (Fig. 87). As all eccentric positions for different positions of the governor must be on the arc of radius Y shown in Fig. 86, so must all lap circle centers be located on the similar arc of radius Y shown in Fig. 87.

On the Zeuner diagram the change in the position of the

eccentric, due to a readjustment of the forces at the governor, is shown by changed *valve circles*. Corresponding to the eccentricity OE in Fig. 86 the valve circle is shown as a in Fig. 88. A change in the eccentricity to OE_1 demands a new valve circle, b, drawn with the new angle of advance and having a diameter equal to OE_1.

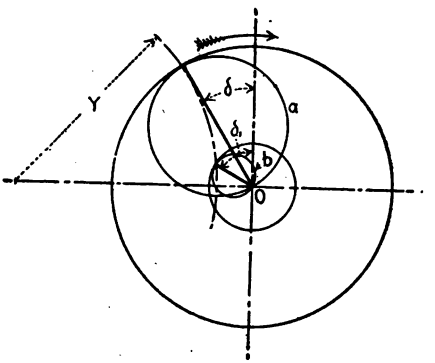

FIG. 88.

CHAPTER VII

VALVE SETTING

There are two methods of setting valves:

(a) By taking off the valve-chest cover and locating the valve by measurement.

(b) By taking indicator cards and adjusting the valve gear until the desired cards are obtained.

The first step, in setting a valve by measurement, is to set the engine on center. Turn the engine until it is almost on center, make a mark on the cross-head and guide and, measuring with a tram from some fixed point, make a mark on the flywheel rim or the crank disk. Turn the engine in the same direction as before past the center until the marks on the cross-head and guide again coincide; then, measuring with the tram from the same fixed point as before, make another mark on the flywheel. Bisect the distance between the two marks on the wheel and bring the bisector opposite the tram. The engine will then be on center. It is important to keep the same brasses in contact with the cross-head and crank pins when the measurements are made with the tram, otherwise there will be an error due to lost motion. When the crank is near the dead center position, the eccentric stands in such a position that a slight movement of the shaft results in considerable movement of the valve. For this reason the crank should be carefully placed before any measurements of the position of the valve are made.

Having the engine on center, to set the valve with equal leads, adjust the angle between the crank and eccentric until the valve opens the port leading to the cylinder a slight amount. The width of the opening should be measured and recorded as a preliminary lead on that end—suppose, for example, that it is 1/8″. Then the engine should be placed on the opposite dead center and the port opening on that end measured and recorded as the preliminary lead on that end—suppose it is 1/16″. There is, then, 1/16″ difference in the leads on the two ends. The valve must be moved on its stem, or the length of the valve rod changed, an amount equal to half the difference, or 1/32″. This move-

ment of the valve should be in a direction away from the port having the smaller opening.

By the method described, the leads on the two ends of the valve will be made equal, that is, the distance the valve uncovers the steam port will be the same for both dead-center positions. But while the leads are equal they are not necessarily the required amount and it remains to set the eccentric to give the leads desired. Place the engine on center once more, and after loosening the eccentric, move it around the shaft until the desired lead is obtained. As a final check, after securing the eccentric, the engine should be placed on the other dead-center and the lead proven correct.

If the leads are to be different on the two ends, say 1/16″ on the head end and 1/8″ on the crank end, after setting the engine on center, set the valve and eccentric so that there is some port opening on the head end. Measure the opening and record it as a preliminary lead; suppose it is 1/32″. Place the engine on the other dead center and measure the crank end lead; suppose it is 1/4″. The difference between these preliminary leads is 1/4″ − 1/32″ = 7/32″, while the difference between the desired leads is 1/8″ − 1/16″ = 1/16″. By shifting the valve 1/2 (7/32″ − 1/16″) = 5/64″ toward the crank end, the lead on the head end will become 1/32″ + 5/64″ = 7/64″ and on the crank end 1/4″ − 5/64″ = 11/64″. The difference between the leads will then be 11/64″ − 7/64″ = 1/16″, which is the desired amount, but the leads are each too large by 3/64″. They can be decreased to the required dimensions by reducing the angle of advance.

(In connection with Fig. 12 (p. 12),) attention was called to the angularity of the eccentric rod which causes the valve to be drawn toward the shaft more than it would be if angularity were absent. In setting the valve to give certain desired leads, it is set slightly more toward the head end than it would be if the eccentric rod did not produce this effect. Thus, in setting the valve, the only serious distortion caused by the angular vibration of the eccentric rod is corrected.

Setting the valve by the indicator consists simply in making the cards from the two ends as nearly alike as possible, by adjusting the length of the valve rod, and then shifting the position of the eccentric until the events are properly timed. Of course the valve should be set for normal running conditions but cards should also be taken with the engine overloaded and under-

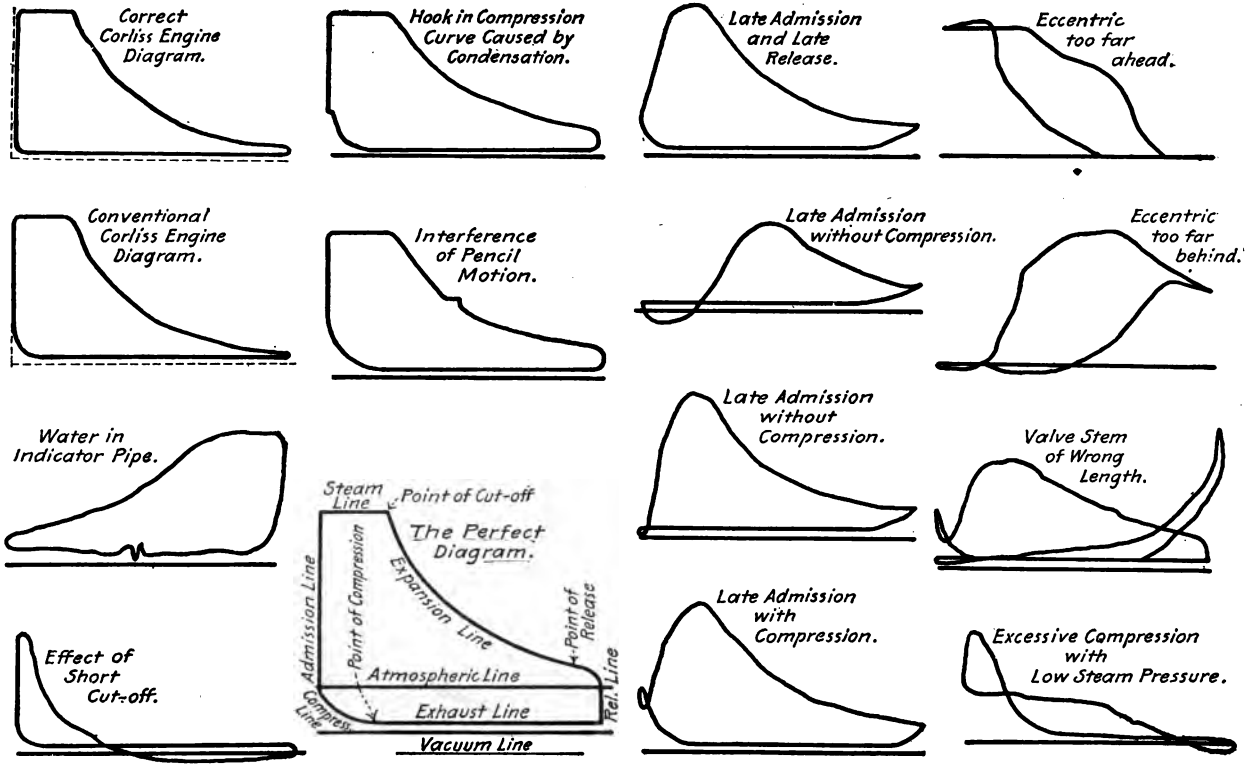

FIG. 89.—Indicator diagrams.

NOTE.—Fig. 89 is taken from a chart published by *Power*.

loaded to see that the valve acts properly throughout the range of running conditions.

Fig. 89 shows a number of indicator cards which may be obtained with different valve conditions. A careful study of the causes of peculiar cards is the best guide to proper valve design and setting.

CHAPTER VIII

THE DESIGN OF SLIDE VALVES

If at admission the crank is at the same angle from the dead center position on the two ends, that is, if the leads are equal as illustrated in Fig. 90, the steam laps must also be equal. This is readily seen when attention is called to the fact that the sum of the steam lap and lead must always equal the distance QM which in turn always equals $Q'M'$.

With *equal leads* the percent of the stroke at which cut-off occurs will be different for the two ends. During the forward stroke it is $\frac{DW}{DD'}$ and during the return $\frac{D'W'}{DD'}$, and it is evident from the figure that DW is considerably more than $D'W'$. The corresponding indicator cards are drawn to show that the distribution of work between the two ends is quite different, the area of the head end card being greater than that of the crank end card. On account of the connecting rod crank method of transmitting motion it is impossible to have the leads and the cut-offs equal at the same time, without using some special form of gear.

Unequal cards are undesirable; they should represent equal amounts of work so that the ratios of expansion will be equal and the turning effort on the crank shaft as nearly uniform as possible. To secure smoothness in running, the engineer endeavors to set the valve so that the indicator cards will be alike.

The cut-offs can be made equal, as shown in Fig. 91, by making the leads and consequently the steam laps unequal. This results, however, in unequal admissions and a larger port opening on one end than on the other.

Fig. 92 shows a curve known as the *valve ellipse* in which the ordinates represent the displacement of the valve from its mid-position and the abscissæ the corresponding positions of the piston in its stroke. Positions to the right of mid-position are measured up from the line A–A and positions to the left are measured down. By laying off the amount of movement re-

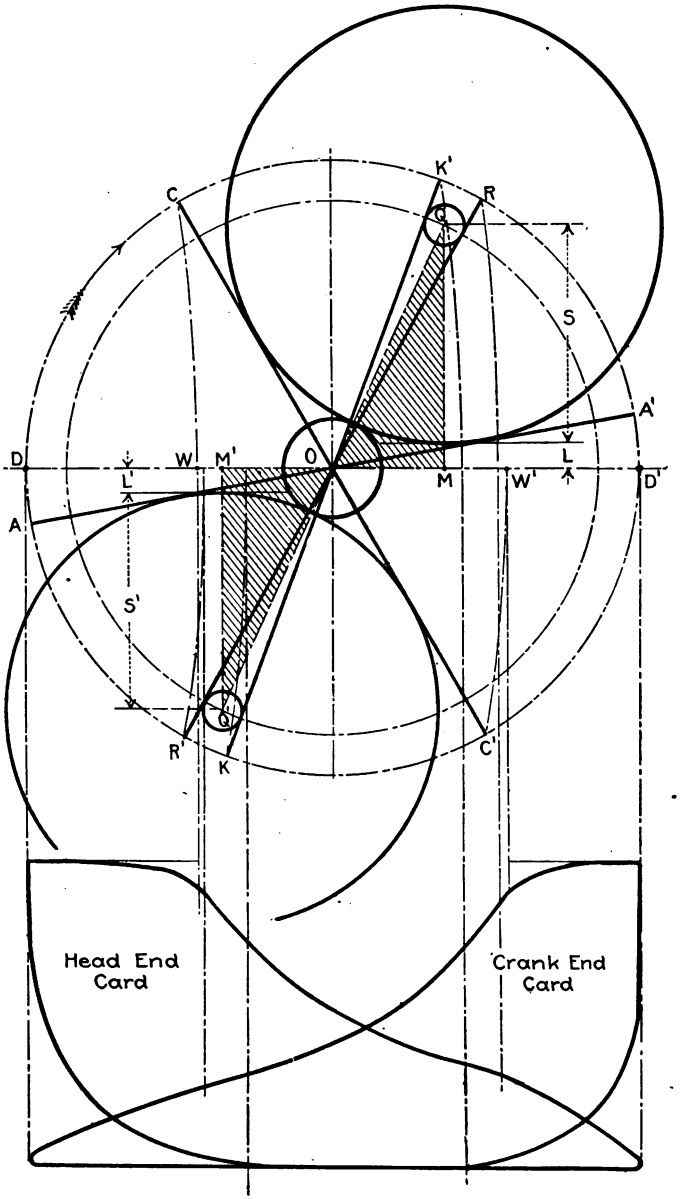

FIG. 90.—Equal leads and unequal cut-offs.

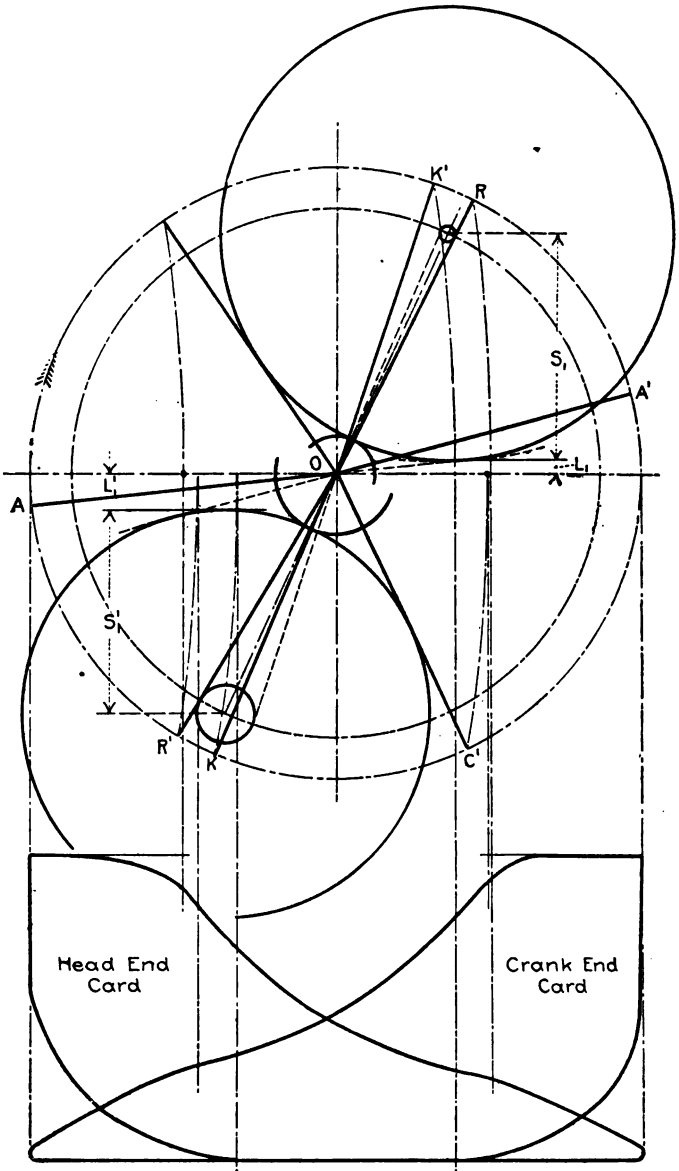

FIG. 91.—Unequal leads and equal cut-offs.

quired to draw the valve over the amount of the steam lap, the net port opening and the time when it occurs can be read from the figure.

The cut-offs shown in Fig. 90 are represented at the points c and c' in Fig. 92 and the steam laps are shown as s and s'; c is a little later than 1/4 stroke and c' a little earlier than 1/4 stroke.

The cut-offs shown in Fig. 91 are represented by the points d and d' in Fig. 92 and the steam laps by s_1 and s'_1; d and d' are both at 1/4 stroke.

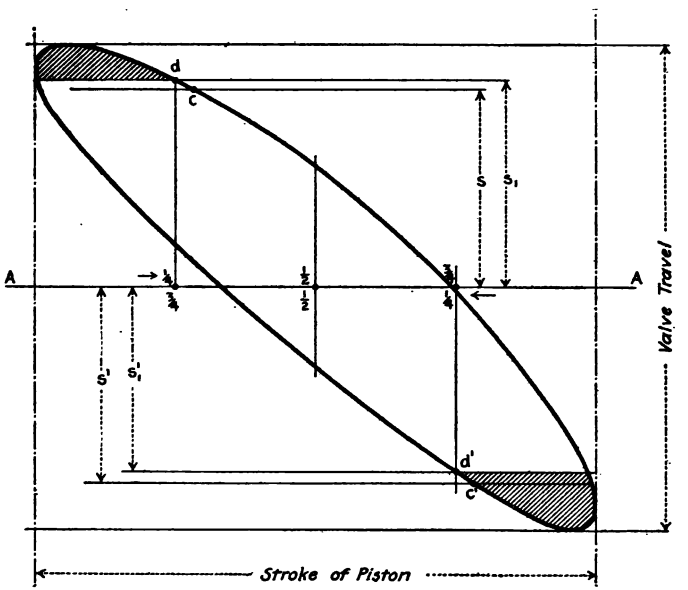

FIG. 92.—Valve ellipse.

Thus it is seen from Figs. 90, 91 and 92 that the cut-offs can be equalized by increasing the head end and decreasing the crank end steam laps, but that this is accomplished at the expense of unequal leads and admissions. Fig. 92 further shows that the change of steam laps materially affects the size of the port openings and caused the throttling effect to be greater on the head end than on the crank end. For early cut-offs this will be more noticeable on the cards than for later cut-offs.

Measurement of the cards in Fig. 90 shows the área of the head end card to be 112.5% of the area of the crank end card. In Fig. 91 the area of the head end card is only 92%

of the area of the crank end card. In the first case the head end is doing *more* than half the work because the cut-off is later on that end. In the second case the cut-offs are the same but the head end is doing *less* than half the work because there is more wire-drawing and compression on that end.

Evidently the best setting of the valve would give cards somewhere between those of Figs. 90 and 91, with a cut-off on the head end a little later than on the crank end but not so much later as is obtained with equal leads.

It is not always possible or advisable to make the indicator cards exactly equal in area, because to do this sometimes causes the engine to pound on account of the large difference in leads.

The amount of compression should be practically the same on the two ends, its purpose being to cushion the reciprocating parts and fill the clearance space with steam at high pressure. Sometimes to secure quiet running of the engine it is necessary to give more compression on the head end than on the crank end because the inertia forces of the reciprocating parts are greater near the head end.

Design of a D-Slide Valve.—A satisfactory method of designing slide valves is illustrated by the following example:

Given.—An 8″ × 12″, 200 R.P.M. engine
Cut-off at 25% of the stroke
Compression at 70% of the stroke
Lead 3/32″.

Design.—A D-slide valve for this engine.

Let a = area of piston in square inches,

v = average piston speed in feet per minute, $= \frac{2LN}{12}$

a' = area of maximum port opening in square inches,

w = width of maximum port opening in inches,

v' = nominal steam speed in feet per minute.

Then

$$a \times v = a' \times v'$$

$$a' = \frac{a \times v}{v'} = \frac{50.3 \times 2 \times \frac{12}{12} \times 200}{9400 \text{ (see curve, Fig. 45)}}$$

$$= 2.14 \text{ sq. in.}$$

The length of the port is usually about 3/4 the cylinder diameter;

$$3/4 \times 8 = 6'' = \text{length of port.}$$

Therefore $w = \frac{2.14}{6} = 0.357''$

The various steps in the construction of the diagram to determine the laps, valve travel, and angle of advance, are explained in connection with Fig. 93.

Instead of trying to make the admissions equal at the expense of unequal cut-offs, the attempt will be made to secure a better division of work between the two ends by making the leads unequal and in that way causing the cut-offs to be more nearly equal. In endeavoring to adjust a number of undesirable things without too much sacrifice of desirable characteristics, the designer must use his judgment. He will usually find it necessary to make more than one trial before satisfactory results are obtained.

After drawing a pair of axes through O, Fig. 93, and a circle to represent the path of the crank pin, locate m and m' at 25% of the stroke from each end. As a preliminary trial choose the leads so that the head end lead will be 1/16″ and the crank end about 1/8″, giving an average of 3/32″ which agrees with the given data. It may be desirable to change these after partially completing the diagram. The head end lead of 1/16″ should be laid off above the horizontal axis and the crank end lead 1/8″ below the horizontal axis in the usual way.

A short distance to the right of the point m choose the time of head end cut-off at g and swing the arc to locate the crank position OC. Just how much to the right of m this cut-off should be taken can not be told until after it is seen how the choice works out when compared with the other events.

The computed width of maximum port opening is 0.357″. If this is used on the head end the crank end opening will be unnecessarily large, yet if this value is used on the crank end the opening on the head end will not be sufficient and will cause too much throttling. As a compromise, a maximum port opening of 5/16″ will first be tried on the head end.

Having determined, temporarily at least, the crank position for head end cut-off, the head end lead, and the head end maximum port opening, the diagram can be partially drawn to locate

the centers of the lap circles at Q and Q', and determine the valve travel.

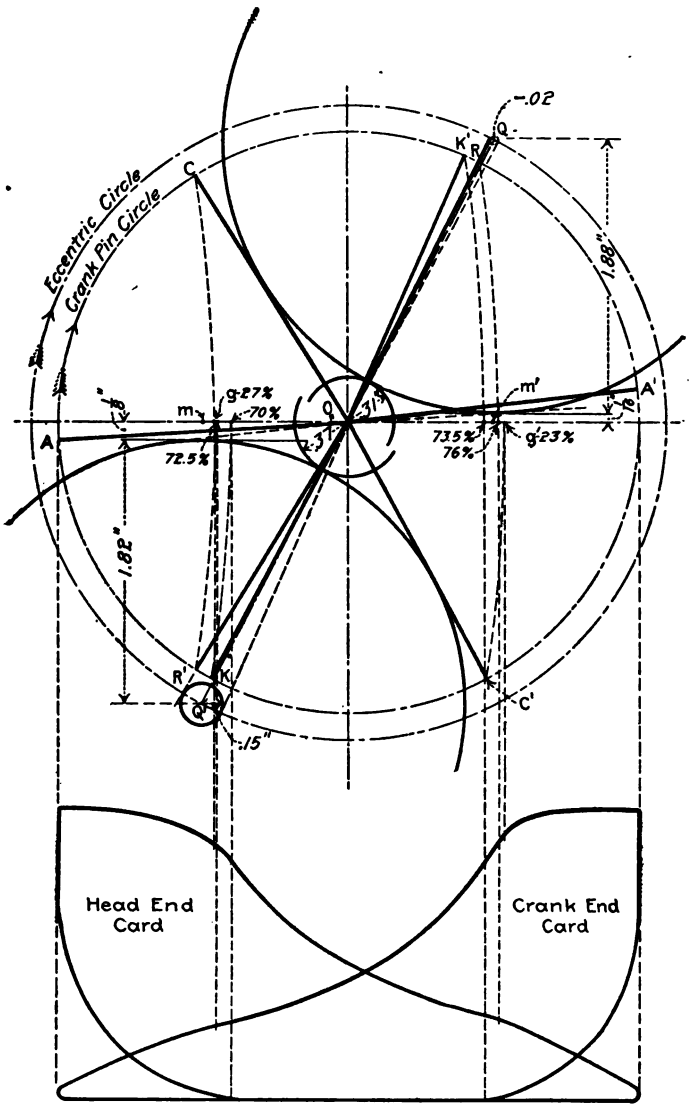

FIG. 93.

With Q' as a center and tangent to the crank end lead line, the crank end steam lap can be drawn and the time of the crank

end cut-off investigated. It should occur at m' or slightly earlier in the stroke. The crank end point of cut-off, g', should not be more distant from m' than g is from m and preferably a little less.

On account of the difference in leads and the fact that the reciprocating parts require more cushioning at the head end than at the crank end it is perfectly proper to have a little higher compression on the head end, the compression partly counteracting the smallness of the lead.

The head end compression has been taken at 70% and this causes the release to be at 76% of the stroke. On the crank end the compression was first taken at 70% but was later modified to 73.5% because it was considered that this much additional area could be added to the crank end card and still have a pressure at the end of compression which would compare favorably with the pressure on the head end.

The results shown by the valve diagram are:

	Head end	Crank end
Lead	1/16″	1/8″
Steam lap	1.88″	1.82″
Exhaust lap	−0.02″	+0.15″
Valve travel	4.38″	
Angle of advance	62.5°	
Cut-off	27%	23.0%
Release	76%	72.5%
Compression	73.5%	70.0%

Some engine builders neglect the effect of the angularity of the connecting rod in constructing the valve diagram and leave some extra stock on the valve so that the laps can be changed slightly after indicator cards have been taken with the engine on the testing floor.

The width of the port in the valve seat is determined in the same way as the maximum port opening but using a nominal steam speed of 6000 ft. per minute for the machined openings in the seat and 5000 ft. per minute for the rough cored passages leading into the cylinder:

$$0.357'' \times \frac{9400}{6000} = 0.56'' \text{ say } 9/16''.$$

$$0.357'' \times \frac{9400}{5000} = 0.67'' \text{ say } 11/16''.$$

Design of a Flat Double-ported Valve.—Let it be required to design the valve for a 10″ × 10″, 250 R.P.M. Ball engine; cut-off at 25% of the stroke, compression at 70% of the stroke,

admission to occur when the crank is 4.5° before the dead center position. See Fig. 71.

The maximum port opening is found in the same way as in the preceding problem:

$$\frac{\pi \overline{10}^2}{4} \times \frac{2 \times 10}{12} \times 250 = a' \times 9400$$

$$a' = 3.48 \text{ sq. in.}$$

Assume the length of the port is 7″. Then the width of the maximum port opening is

$$\frac{3.48}{7} = 0.497'', \text{ say } 0.5''.$$

The Ball valve is a double-ported flat valve and provides two passages for the inflow of steam. In order to provide a maximum port opening of 0.5″, the valve must be moved only $\frac{0.5''}{2} = 0.25''$ from the admission position.

The complete diagram, shown in Fig. 94, is so similar to Fig. 93 that it needs no further explanation.

In this type of engine the distance between the centers of the ports in the valves seat is usually about half the length of the cylinder bore. A 10″ × 10″ engine would have a piston about 4″ wide and clearance distances of about 3/8″. Then the length of the cylinder between the insides of the heads would be

$$10'' + 4'' + 3/8'' + 3/8'' = 14\tfrac{3}{4}''$$

and half this would be $7\frac{3}{8}''$. Knowing the dimensions of the steam and exhaust laps from the diagram and having decided upon the location of the cylinder ports the design of the valve can be completed as shown in Fig. 95.

The necessary area for the passage of exhaust is determined in the same way as in the preceding problem, but the required width of the port at the valve seat is also affected by the thickness of the metal between the edge of the valve and the passage through the valve. When the valve is admitting steam this metal obstructs the cylinder port and the port must be made wide enough to give the required net opening.

The width of the cylinder port at the valve seat to give the necessary passage area for the exhaust steam is

$$0.497 \times \frac{9400}{6000} = 0.78'',$$

but the width necessary for the inflow of steam is
0.497″ + 0.5″ width of metal at the edge of the valve = 0.997″.

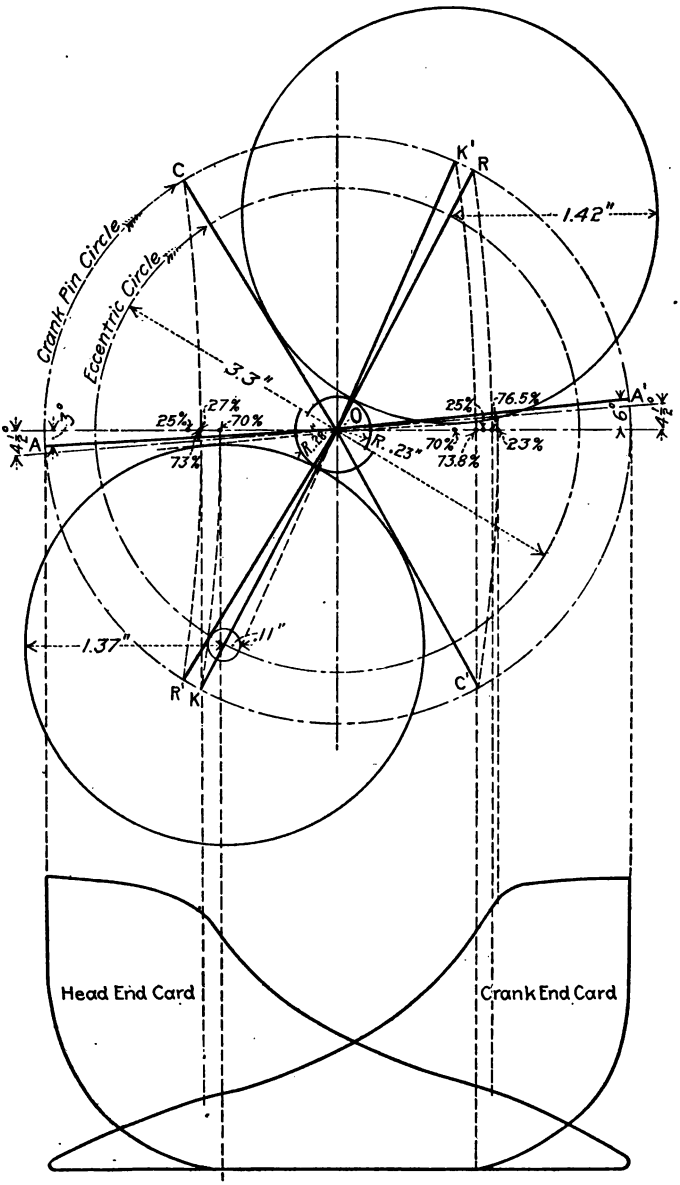
C
K'
R
1.42"
Crank Pin Circle
Eccentric Circle
3.3"
O
A
A'
25%
27%
70%
73%
25%
76.5%
70%
73.8%
23%
R. .23"
1.37"
.11"
R'
K
C'
Head End Card
Crank End Card

FIG. 94.

The valve has been designed to give an opening 0.25″ wide past the outer edge and the passageway through the valve is 3/8″ wide. This passageway is separated from the edge of the valve by a strip of metal 1/2″ wide, so that the width of the port at the valve seat will be made 0.25″ + 0.375″ + 0.5″ = 1.125 or $1\frac{1}{8}$″.

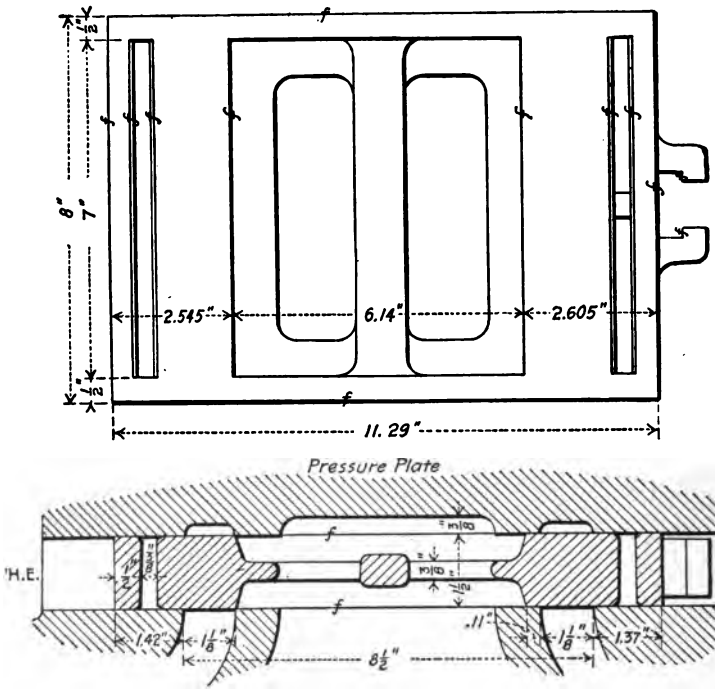

FIG. 95.—Double ported flat valve for 10″ × 10″, 250 r.p.m. engine

The width of the cylinder port below the valve seat is

$$0.497 \times \frac{9400}{5000} = 0.935'' \text{ or say } 1''.$$

Frequently the computed width of the passage in the valve is so small that it should be arbitrarily made larger to insure a smoother and better casting. In this problem, for example, the computed width was 1/4″ and the valve could have been made with only 1/4″ passage, but it was thought advisable to use 3/8″.

There is no satisfactory way to compute the width of metal at the ends of the valve, but since the valve rod connects with

one of these strips they must be made strong and rigid. Usually the thickness is fixed by the judgment of the designer and ribs are used to connect the strip and the body of the valve to obtain stiffness.

This valve is usually designed so that its extreme position will be as shown in Fig. 96 *a* when the engine is running normally. The valve will generally be under the control of a shaft governor

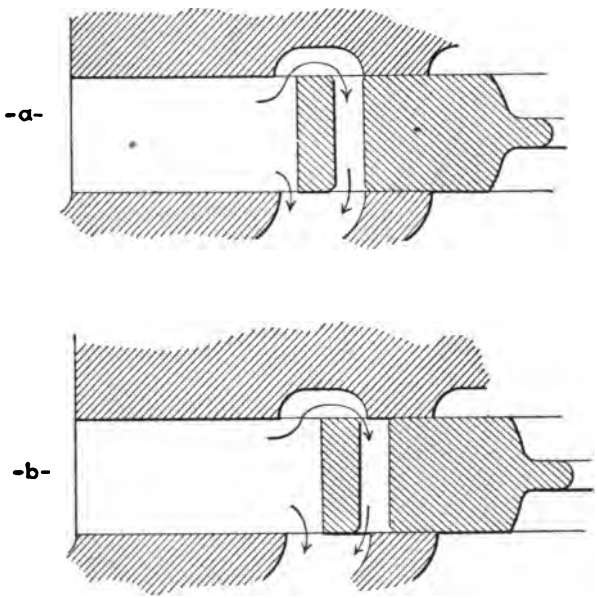

FIG. 96.

which will cause variable travel with changes in load. For a later cut-off due to a load above the normal the valve will move to some other extreme position as in Fig. 96 *b*, and partly or entirely close the opening through the valve itself. In some cases the valve may act single ported when wide open and double ported when partially opened.

PROBLEM 14

Construct a curve showing port openings as ordinates and corresponding piston positions as abscissæ for the valve designed above:

1. When the valve travel is as shown in Fig. 94.
2. When the valve travel is increased to 4½", without any change in the valve itself or in the cylinder.

Investigation of the Action of a Shaft Governor.—If the engine is equipped with a shaft governor any movement of the governor affects the position of the eccentric center relative to the crank. The eccentric center is constrained to a definite path through which it can be moved by the governor and for every position of the eccentric center on this path there is a corresponding lap circle center on the Bilgram diagram. The locus of the

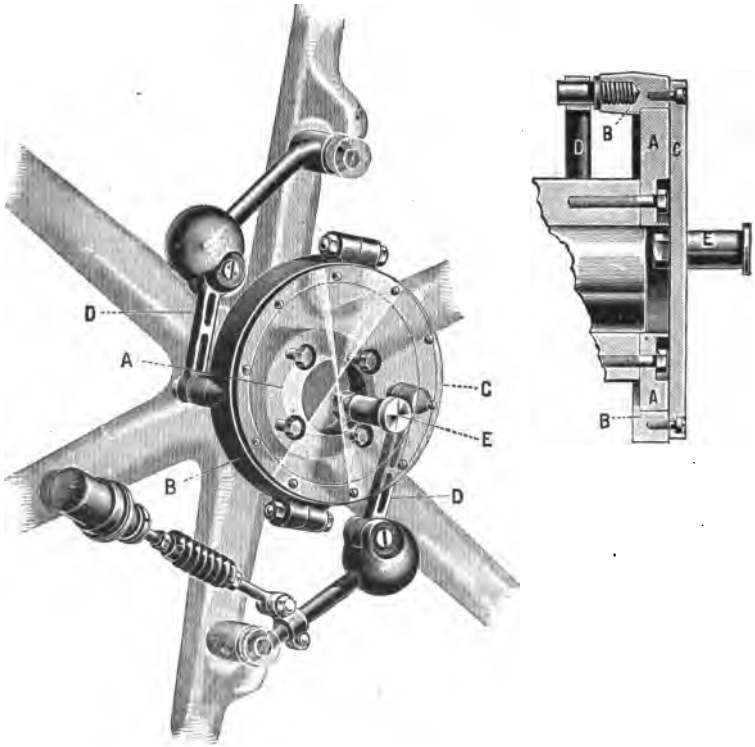

FIG. 97.—Governor and eccentric pin, Ball and Wood engine.

lap circle centers, or the points Q, should be shown on the diagram. In a problem of design the path chosen depends on the governor to be used. In a problem of investigation of an engine already built, the path can be determined by measuring the mechanism on the engine.

The governor of a Ball and Wood engine is shown in Fig. 97. The governor arms are attached to a plate C which is set eccentric with the shaft and the eccentric pin, E, is in turn eccentric with the plate.

To determine the locus of E for all positions of the governor, proceed as follows:

1. Place the engine accurately on center.
2. Locate the center of the plate C relative to the shaft and crank.
3. Locate the pin E with respect to the center of the plate C.

Fig. 98 shows the measurements taken on a 10″ × 12″ Ball and Wood engine in the laboratory at the University of Michigan. With the crank held at OD' and with the spring disconnected the governor could be moved through its entire range and the eccentric center caused to assume any position on the path E.

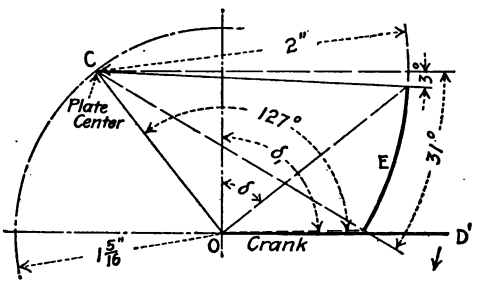

FIG. 98.

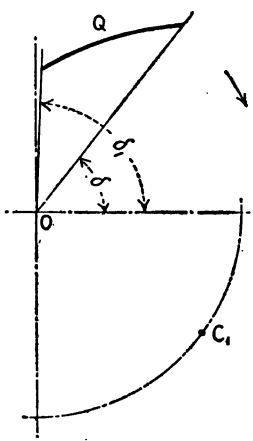

FIG. 99.

Plumb lines, a protractor and calipers were used in locating the point C and the extreme positions of the center of the eccentric pin E. Knowing the possible positions of the eccentric center, the locus Q of the corresponding lap circle centers can be constructed as shown in Fig. 99, and then the valve diagram drawn, keeping in mind that the lap circle center must be on the path Q.

For further illustration consider the engine shown in Fig. 100. To construct a complete valve diagram for the engine, first set the valve properly and locate the pivot pin P (Fig. 101) about which the eccentric is swung by the governor. After measuring the steam lap, exhaust lap and lead the engine should be turned over by hand and the valve travel measured.

While turning the engine by hand the governor is in an extreme position causing maximum valve travel and latest cut-off. Knowing the laps, lead and the maximum valve travel, construct the

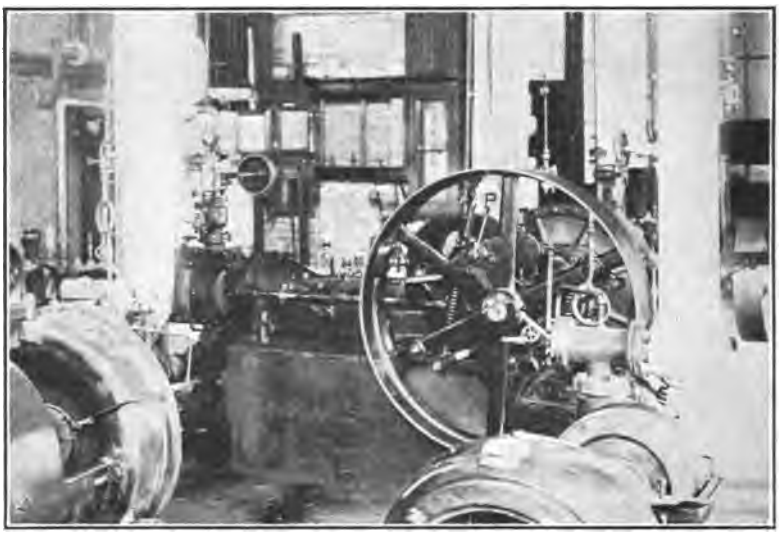

FIG. 100.

full lines of Fig. 102, thus determining the angle of advance for latest cut-off. This gives sufficient information to locate one position of the eccentric center, such as E, in Fig. 101. An arc through E with center at P gives the path through which the governor can move the eccentric. The corresponding path of

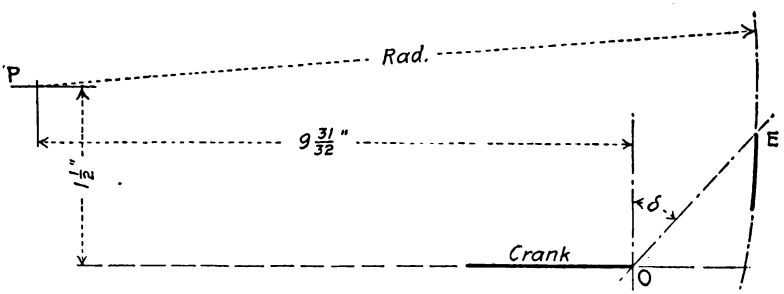

FIG. 101.

lap circle centers, Q, should be shown on the diagram in Fig. 102. It is a simple matter, after disconnecting the springs, to block the governor in the extreme position and measure the minimum

valve travel. This determines the limiting positions of the eccentric and the length of the arc E in Fig. 101 and Q in Fig. 102.

In designing a valve to be controlled by a shaft governor, as yet undesigned, the eccentric center is first determined for the normal running of the engine. The path through which the governor will move the eccentric may then be chosen. In making this choice it must be remembered that it is not desirable

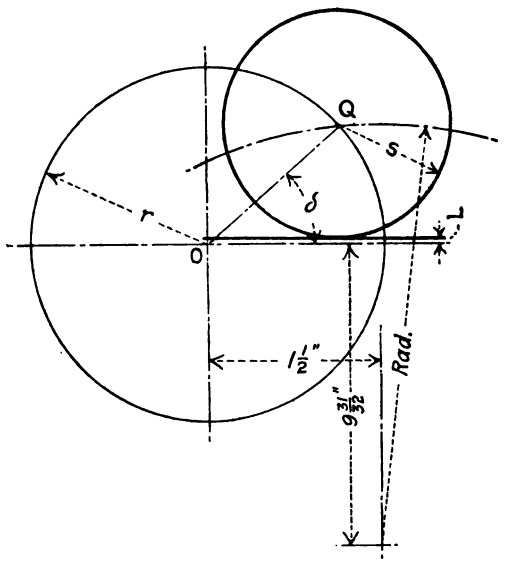

FIG. 102.

to have the time of admission vary much with the different cut-offs. Also such a path must be chosen that the governor will be well proportioned to the flywheel of the engine. Inspection of engines in successful operation will give the best ideas about these proportions.

CHAPTER IX

VALVES WITH RIDING CUT-OFF

When a single slide valve is used on an engine to regulate all the events, if admission occurs slightly before dead center and

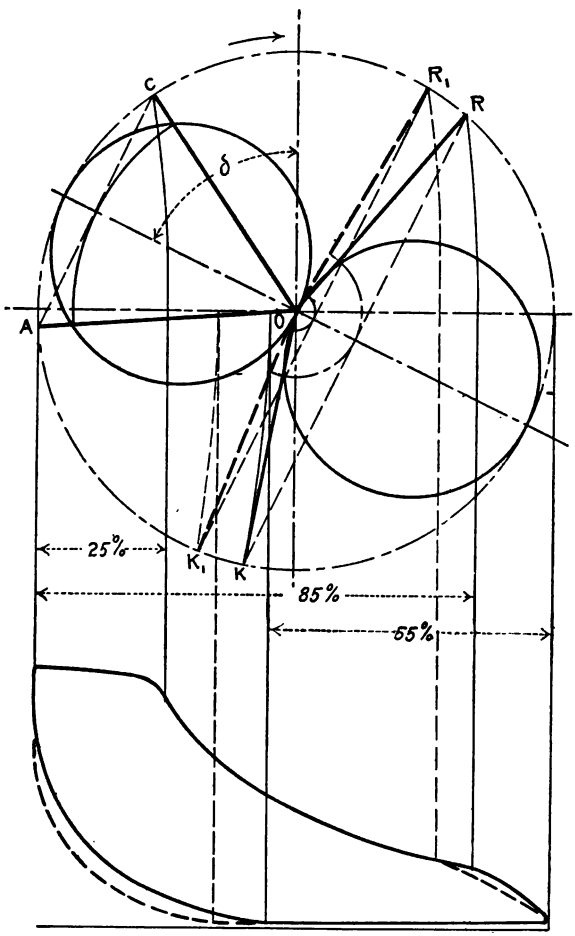

FIG. 103.

cut-off early in the stroke, the angle of advance determined by these two events is large, as shown diagrammatically in Fig. 103.

This large angle of advance causes either release or compression, or both, to be early. If one is improved it must be at the expense of the other. In Fig. 103 the crank position for release has been assumed at 85% of the stroke. Compression is thus fixed at 55% of the stroke. The probable card is drawn below the diagram and additional dotted lines inserted to show the effect of trying to make the compression occur later.

On high speed engines a rather high compression pressure is desirable to absorb the inertia force of the reciprocating parts at the end of the stroke; but on lower speed engines so much compression is not necessary, and is undesirable because it reduces the area of the card and the work of the engine per stroke.

One means of surmounting this difficulty is to use what is called a *riding cut-off* valve. Three representative valves of this class will be discussed—the *Meyer*, the *Buckeye*, and the *McIntosh-Seymour*.

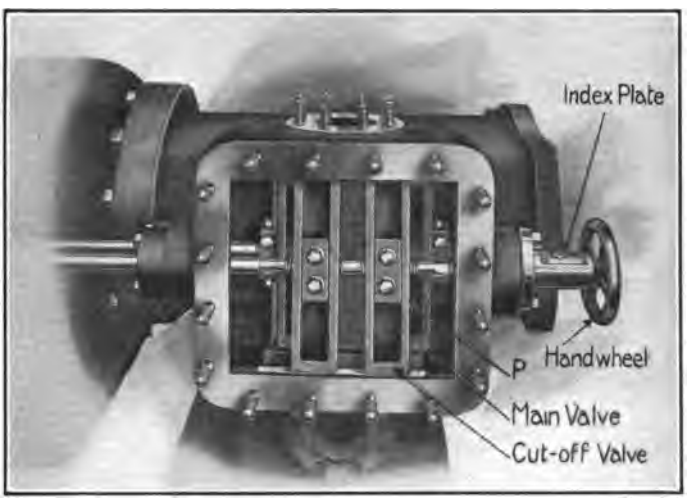

FIG. 104.—Meyer valve.

The Meyer valve (Fig. 104) is an example of a valve with an independent and adjustable cut-off. This type of valve is frequently used on the steam cylinders of air compressors and pumps. It is composed of two parts—the *main valve* regulating admission, release, and compression, and the *cut-off valve* regulating only the cut-off. The main valve acts the same as a D-slide valve, the only difference being that a port P is

formed in the valve itself and steam enters through P instead of past the outer edge. The main valve is operated by a fixed eccentric and does not cut-off until late in the stroke. The cut-off valve consists of two blocks which slide back and forth on the back of the main valve. The valve rod operating the cut-off valve (Fig. 104) is extended through the rear of the steam chest and the end squared to fit a stationary handwheel in which it slides as the engine runs. The rod is threaded for a portion of its length with two separate sets of threads, one set being right-handed and the other left-handed. One of the cut-off blocks is on the right-handed and the other on the left-handed thread. Turning the wheel separates the blocks or draws them together thus making the cut-off earlier or later as may be desired. This can be done while the engine is running without affecting the timing of the other events. An index plate mounted on the wheel bracket indicates the percent of the stroke at which cut-off is occurring.

The valves are operated independently by separate eccentrics and are designed so that at admission the cut-off valve is not obstructing the port P; at cut-off the block slips over the port P while P is yet in communication with the cylinder.

A series of views of the Meyer valve in various positions is given in Figs. 105 to 111 with a common vertical reference line from which the displacement can be measured. Such valves can be investigated or designed by means of either the Zeuner or Bilgram diagram by placing the diagram for one valve on top of the diagram for the other valve. If the travel, steam lap, exhaust lap, and lead of the main valve and the eccentricity and angle of advance of the cut-off eccentric are given, Fig. 112 can be constructed with Q and Q'' as the lap circle centers for the main valve and the cut-off valve respectively.

Fig. 105 shows both valves in mid-position with the lap dimensions indicated. The valves must be put in this position to measure the laps but when properly set for operation both valves will not be in mid-position at the same time. Fig. 112 shows the position of the crank, ON, when the main valve is in mid-position; a perpendicular from Q'' to NO (produced) gives the displacement ($Q''n''$) of the cut-off valve from mid-position. The valves are shown in their correct relative positions, for crank at ON, in Fig. 106.

Referring again to the diagram (Fig. 112) it is seen that for

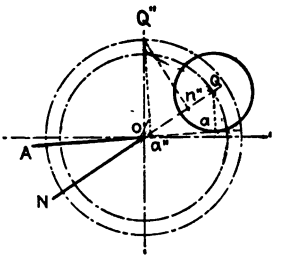

FIG. 112.

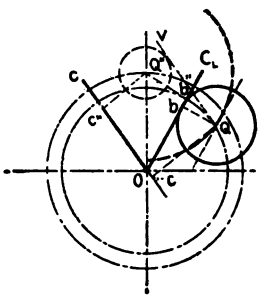

FIG. 113.

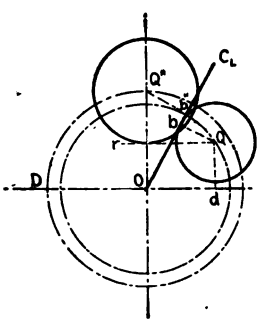

FIG. 114.

(Scale of Diagrams twice that of Sketches.)

FIG. 105.

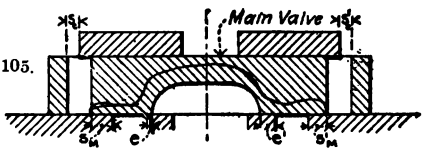

Both Valves in Mid-Position.

FIG. 106.

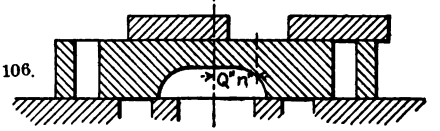

Main Valve in Mid-Position, Crank at ON.

FIG. 107.

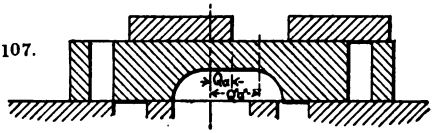

Admission.

FIG. 108.

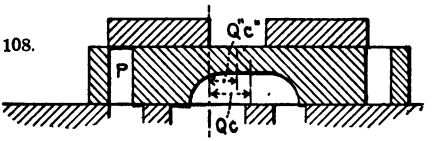

Cut-off, Crank at OC.

FIG. 109.

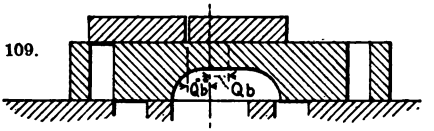

Cut-off, Crank at OC_L.

FIG. 110.

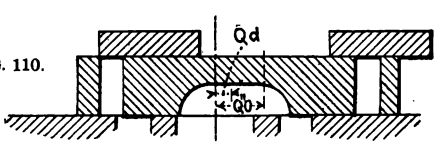

Cut-off, Crank at OD.

FIG. 111.

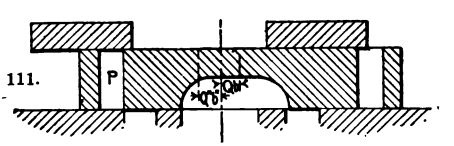

Max. Relative Displacement of Valves Previous to Cut-off by Main Valve.

FIGS. 105 to 114.—Various positions of the Meyer valve.

the admission position, OA, the main valve is the distance Qa from mid-position and the cut-off valve $Q''a''$ to the same side of mid-position. In Fig. 107 the valves are shown in their correct relative positions for crank at OA.

As the crank continues its rotation in a clockwise direction the main valve continues to move to the right and increase the opening to the cylinder port. Soon after the crank position OA is passed the cut-off valve changes its direction of motion and starts toward the left, and when crank position OC (Fig. 113) is reached it has covered the port in the main valve as shown in Fig. 108. The diagram (Fig. 113) shows that the main valve is the distance Qc from mid-position and the cut-off valve the distance $Q''c''$. Imagine the valves shown in Fig. 108 to be slipped back to mid-position. The cut-off valve would fail to cover the port P by the amount Qc–$Q''c''$, *i.e.*, it would have a negative steam lap of that amount.

Looking at this from another standpoint, suppose cut-off is desired when the crank is at OC (Fig. 113) what steam lap must the cut-off blocks have? When the crank is at OC the main valve is a distance Qc and the cut-off valve a distance $Q''c''$ to the right of mid-position. The main valve has traveled farther than the cut-off valve and, to have cut-off occur at this time, the cut-off valve must have a negative steam lap equal to the difference between $Q''c''$ and Qc. This amount can be easily determined and represented on the diagram by drawing QV parallel to OC and then a circle about Q'' tangent to QV.

By drawing the blocks close together the cut-off can be delayed until the crank reaches the position OC_L (Fig. 113) at which time the main valve closes the port to the cylinder. Fig. 113 shows that the main valve is then Qb to one side of mid-position and the cut-off valve $Q''b''$ to the other side of mid-position. The valves are shown in the act of cutting-off in Fig. 109.

By separating the blocks the cut-off can be made earlier. To have cut-off at zero stroke, or at crank position OD (Fig. 114), the event must occur when the main valve is the distance of Qd from mid-position and the cut-off valve $Q''O$ from mid-position. If the valves as shown in Fig. 110 are imagined slid back to mid-position the steam lap of the cut-off block is found to be $Q''O$–Qd, *i.e.*, equal to the radius of the circle drawn about Q'' (Fig. 114) tangent to a line Qr parallel to the crank position at cut-off. As the crank revolves from OD (Fig. 114) the main valve

continues to move to the right for a time then reverses and moves to the left, finally reaching the position shown in Fig. 111, Qb to the right of mid-position, when the crank is at OC_L. During this movement of the main valve the cut-off valve moves continuously to the left, and when the crank is at OC_L the cut-off valve is the distance $Q''b''$ to the left of mid-position. The total maximum relative displacement of the two valves during the rotation of the crank from OD to OC_L is $Qb + Q''b''$.

To prevent steam entering the cylinder past the back edge of the cut-off valve after it has cut-off, the block must be made wide

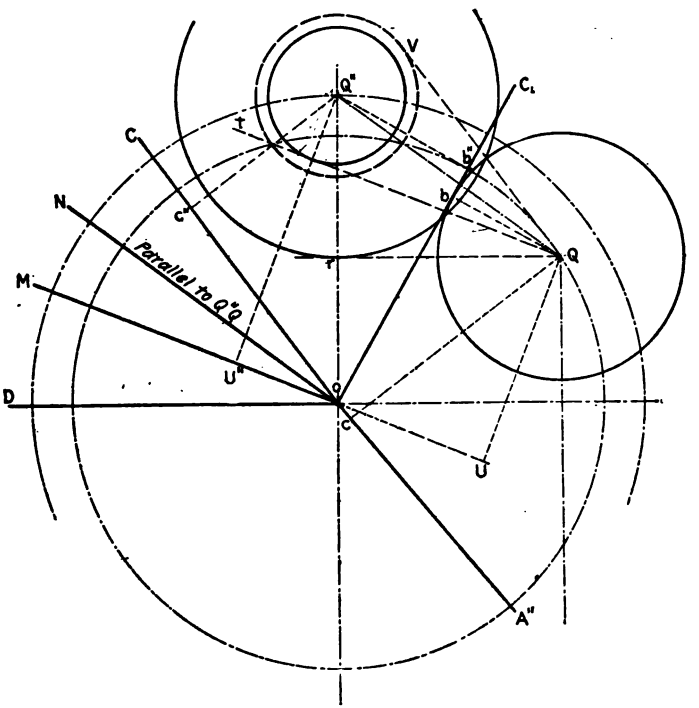

FIG. 115.

enough to lap the port in the main valve until the main valve cuts off the passage P from the cylinder. That is, the width of the block should be $Q''r + Q''b'' + Qb +$ width of port $P +$ an allowance of about $1/8''$.

The necessary steam lap of the cut-off blocks to bring cut-off at any desired time can be determined as illustrated in Fig. 115. If cut-off is to be at the crank position OC, draw

QV parallel to OC. The dotted circle about Q'' and tangent to QV shows the necessary negative steam lap. Similarly for cut-off at any crank position, such as OM, draw Qt parallel to OM, and a circle tangent to this shows the required positive lap. For cut-off at crank position ON, parallel to QQ'', zero steam lap is required; for earlier cut-off the steam lap becomes a larger *positive* amount and for later cut-off a larger *negative* amount. The largest negative lap required is $Q''b'' + Qb$, for that will give cut-off at crank position OC_L, the same time at which the main valve cuts-off.

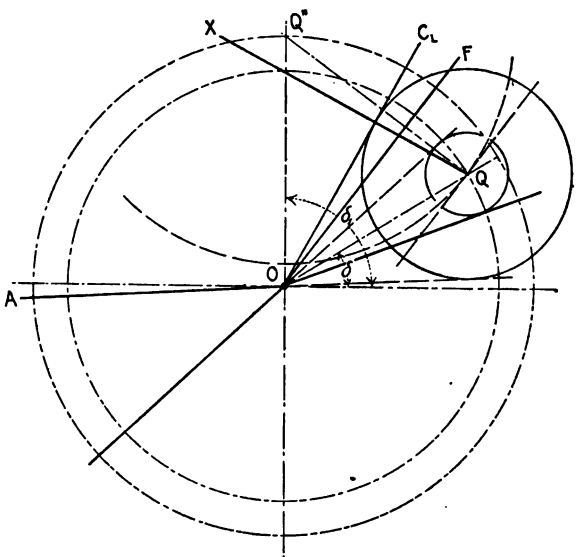

FIG. 116.

In designing a Meyer Valve readmission can be guarded against by properly locating Q'' and making the blocks of the correct width. In Fig. 116, which is a Bilgram diagram for the main valve, QX is drawn perpendicular to OC_L. The lap circle center Q'' for the cut-off valve may be located arbitrarily but it should not be below QX. On engines which are to run in either direction, as hoisting and marine engines, the angle of advance, δ_1, of the cut-off eccentric should be 90°, so that the eccentric is in position to run in either direction. For such an engine Q'' would be on the vertical axis through O. On engines which are not to be reversed it is customary to make the angle of advance of the

cut-off eccentric less than 90° because this allows narrower cut-off blocks and less movement to change the cut-off.

If the blocks are drawn close together to obtain a late cut-off they might cut-off and instantly open again, giving readmission. The throw of the cut-off valve relative to the main valve is $Q''Q$; therefore if a negative lap $Q''Q$ is given to the cut-off valve it will close the port in the main valve and immediately open it again when the crank is at OF, perpendicular to $Q''Q$. This is after the main valve has cut-off so it does not affect the steam distribution. If a greater negative lap is given to the cut-off valve it will never close the port P.

If Q'' is located on the line QX (QX is perpendicular to OC_L) and the cut-off valve given a negative lap of $Q''Q$ it will close

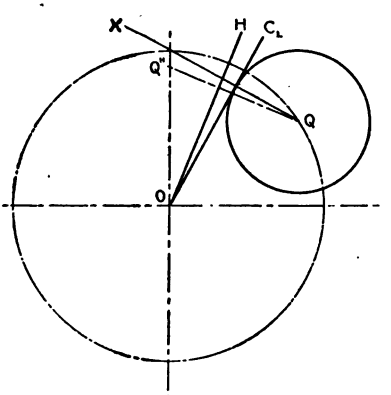

FIG. 117.

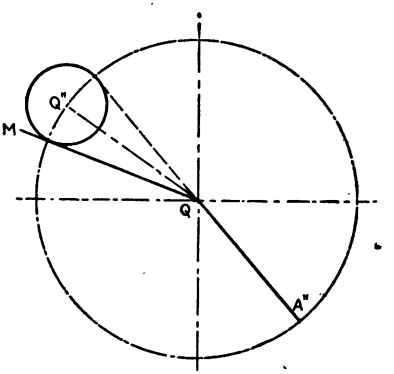

FIG. 118.

the port in the main valve and immediately open it again when the crank is at OC_L; this will occur simultaneously with the cut-off of the main valve and the steam distribution will still be unaffected by the cut-off valve.

If Q'' is located below the line QX, as shown in Fig. 117, the cut-off valve will cut-off and immediately admit again when the crank is at OH. This is before the main valve has closed the port into the cylinder and the steam distribution will therefore be affected.

The motion of the cut-off valve may be considered relative to the main valve (Fig. 118) and the diagram for the cut-off valve constructed as for any ordinary slide valve on a stationary seat. Q then becomes the center of the diagram. The throw of the cut-off valve relative to the main valve, $Q''Q$, is the radius

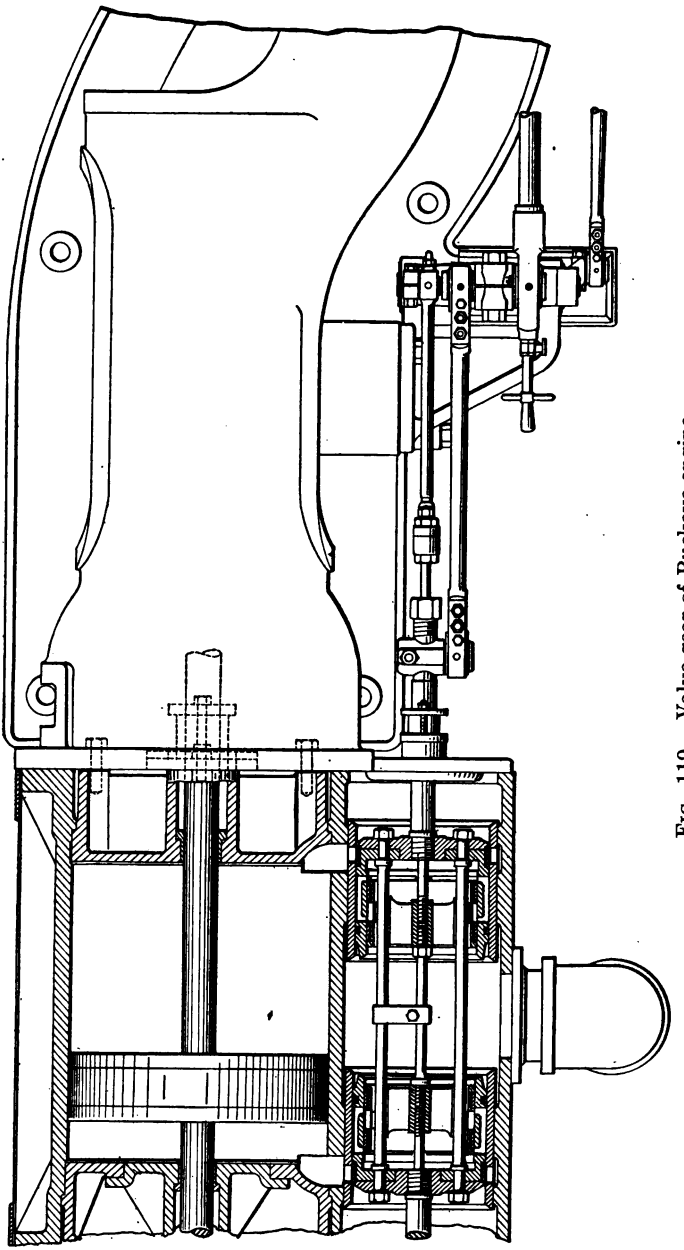

FIG. 119.—Valve gear of Buckeye engine.

of the eccentric circle. For cut-off at crank position QM the steam lap $Q''M$ is required. The cut-off valve uncovers the port in the main valve when the crank is at QA''.

Summary.—1. Design the main valve just like any slide valve with a fixed cut-off, making the cut-off the latest ever desired (Fig. 116).

2. Locate Q'' (Fig. 116) on or above the line QX which is drawn perpendicular to the crank position for latest cut-off.

3. Make the width of cut-off blocks sufficient to insure against readmission.

Buckeye Engine Valve Gear.—A very interesting riding cut-off valve used on the Buckeye engine, manufactured in Salem, Ohio, is shown in Figs. 119 and 120. Both valves are of the piston type and the cut-off valve slides within the main valve. The main valve, which regulates all the events except cut-off, admits steam through a port in the valve itself and exhausts past the outer edge. Cut-off is determined by the inner or cut-off valve.

Each valve has its own eccentric, that of the main valve being keyed to the shaft, while that of the cut-off valve is connected to a shaft governor which changes the angle of advance but not the eccentricity.

The valve rods are connected to the eccentric rods through a compound lever, or rocker, which transmits the motion from the eccentric rods in such a way that the travel of the cut-off valve relative to the main valve is constant, irrespective of the time of cut-off. This constant travel of the cut-off valve, on the main valve, is a desirable feature since it eliminates the possibility of wearing shoulders which would cause leakage with variable travel.

Fig. 121 shows the compound rocker and Fig. 122 a line diagram of the gear, drawn in a conventional form. The main valve rod and the main eccentric rod are attached to the upper end of the rocker at V_m and E_m respectively. The lower end of the rocker E_mBA is pivoted to the engine frame at A. At V_c the valve rod of the cut-off valve is attached to the rocker DBE_c, the pivot B being in the rocker E_mBA. The cut-off eccentric rod is attached to E_c. B is at or near the center of the rocker.

Since the main valve takes steam inside, the position of the valve and eccentric for dead center is as shown in Fig. 123. The horizontal motion of the eccentric is transmitted to the

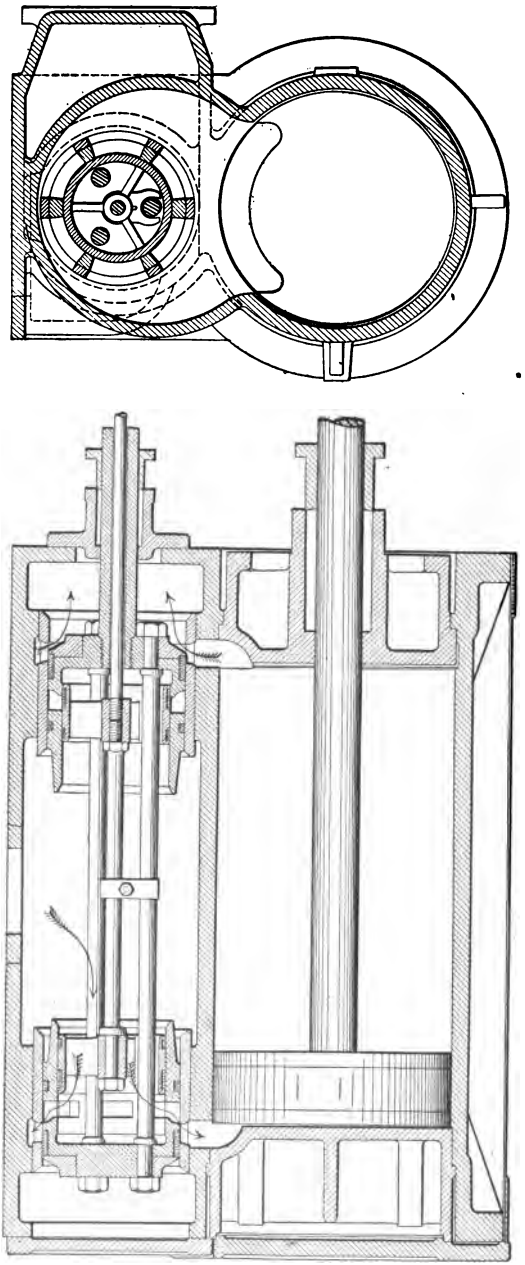

FIG. 120.—Cylinder and valve of Buckeye engine.

valve without change and the main valve is similar to an ordinary valve with inside admission; it is not affected by the rocker.

Turning now to the cut-off eccentric and rocker, Fig. 122, assume that $DB = BE_c$. E_c swings a constant amount, equal to the cut-off eccentric radius, to each side of the stationary point A. Since only the angle of advance of the cut-off eccentric is changed

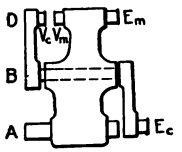

FIG. 121.

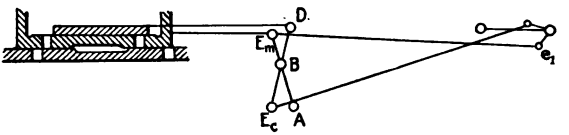

FIG. 122.

the magnitude of the movement of E_c is constant. If E_mA is held stationary, D swings the same amount as E_c since $DB = BE_c$. If E_mA is not held stationary but is moved by the eccentric e_1, the pivot point B is carried with the rocker so that the movement of D relative to E_m is the same as before. The time in the stroke when D and E_m pass each other will vary with the time of cut-off.

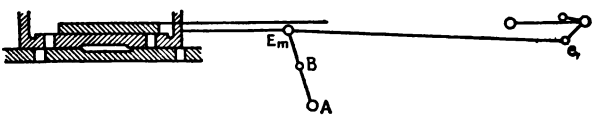

FIG. 123.

McIntosh-Seymour Engine Valve Gear.—The valves of the McIntosh-Seymour Engine, built in Auburn, N. Y., belong to the type known as *gridiron* valves. A riding cut-off is supplied on the steam valves and the arrangement is as shown in Fig. 124. There is a separate valve for admission and for exhaust at each end of the cylinder, thus making the admission events independent of the exhaust events and all the events on one end independent of those on the other.

The motion of the main valves is derived from a lay-shaft called the *main rock shaft* which is rocked by a fixed eccentric, and this rocking motion, considerably distorted, is transmitted to the valve by a crank and toggle. The distortions are such as to cause the valve to move quickly in opening, pause when full open, and remain almost stationary when closed. On account of the many ports and the pause when full open, a small

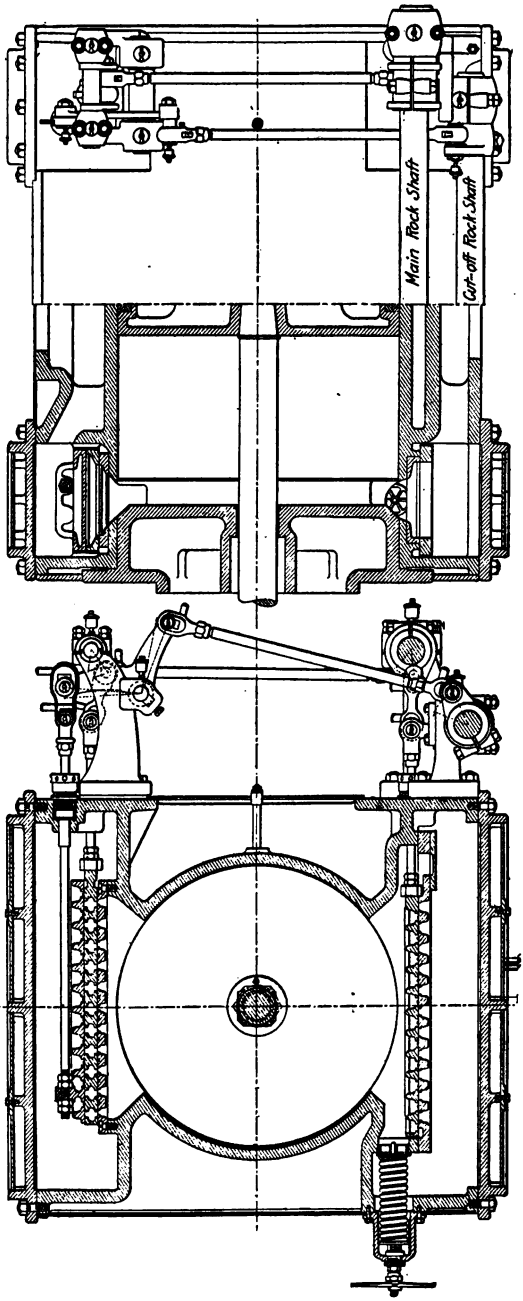

FIG. 124.—Cylinder and valve gear of McIntosh-Seymour engine.

movement of the valve admits ample steam. This movement ranges from about 1/2″ in the smaller engines to 1 1/2″ in the largest sizes.

The exhaust valves are driven by direct connection to a crank on the same lay-shaft which operates the main steam valves.

Another lay shaft called the *cut-off rock shaft*, rocked by an eccentric controlled by a shaft governor, operates the cut-off valves through a crank, long link, and bell crank lever. For ordinary loads the main valves and cut-off valves move in opposite directions, when cut-off occurs, thus giving quick closure.

The gear, being positive in action, is not limited to slow speeds of operation and is analogous to the four-valve engines using Corliss valves without trip motion.

In designing such a gear, where the motion of the eccentric is not transmitted direct to the valve, but is distorted by interposed levers and cranks, cut and try methods must be used.

A layout showing a tentative arrangement of levers and rods which will transmit the motion should first be made, and then the whole combination traced through a complete revolution to determine the action of each individual part, and particularly that of the valve. It is not to be expected that the first trial will give the best result but it will indicate where changes should be made to approach closer to the desired result. The Zeuner diagram applied to such gears will not be made up of valve circles but irregular curves.

CHAPTER X

PUMP VALVES

As a direct acting pump has no revolving shaft from which to take its valve motion, the valve gear must be of some different form from that employed with the steam engine. The valve proper is similar to the engine valve and is usually flat and single ported. It is moved either by steam, as in the case of the Cameron pump, by mechanical means, as in the Worthington duplex pump, or by a combination of steam and mechanical means, as in the Blake-Knowles.

Pump valves must be made positive in action, that is to say, the operation at the slowest speed must be perfectly continuous and the pump never liable to stop as the valve passes its central position. Furthermore, the pump should always start regardless of the position in which it was previously stopped.

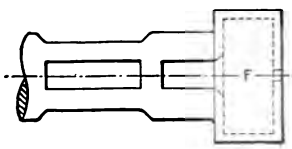

Top view of plunger *F*.

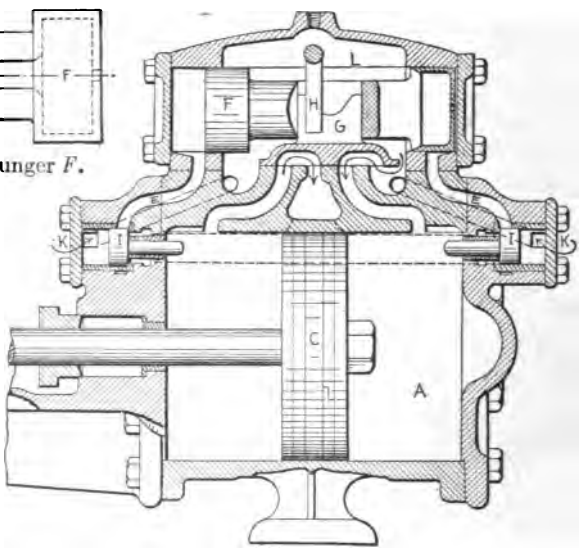

FIG. 125.—Steam cylinder of Cameron pump.

The Cameron pump is a good example of the class whose valve is operated by steam acting on an auxiliary plunger connected to the valve. A section through the steam cylinder

of a Cameron pump is shown in Fig. 125. The plunger *F* moves the valve *G* which admits steam to the cylinder *A*. The plunger *F* is cylindrical, with a cavity at each end filled with steam from the steam chest *L*. A small hole in each end of *F* allows steam to pass out and fill the space at the end of *F*. In the position shown the pressure on both ends of *F* is the same so that *F* is balanced. A projection, *G*, on the back of the valve, fits into a slot in *F* so that as *F* moves it carries *G* with it.

As the piston *C* nears the end of its stroke to the left, it comes in contact with the reverse valve, *I*, moves it to the left and thus connects passage *E* with the main exhaust. This unbalances the plunger *F* and it moves to the left and closes port *E*. The valve is carried with the plunger and allows steam to be admitted to the left of piston *C*. The piston then moves to the right thereby releasing the valve *I* which is immediately closed by steam entering through the passage *K*.

The pump necessarily takes steam during the full stroke since the resistance is constant and there is no flywheel to store up energy. The form of the ports in the cylinder causes enough steam to be entrapped to cushion the piston at the end of the stroke.

Worthington Duplex Pump.—In 1859 *Henry R. Worthington* invented the *Duplex Pump*. A unit consists of two separate pumps of the same dimensions, side by side on a common frame. The piston rod of one pump operates the valve rod of the other. Fig. 126 shows the general appearance of the pump and Fig. 127 a section through one side. The action is as follows: suppose the piston in the foreground of Fig. 126 moves to the right, it causes *A* to move to the right, and *A*, working through a reverse lever, draws the valve of the companion pump to the left. This admits steam to the right of the *other* piston and it moves to the left, carrying with it an arm similar to *A* which working through a lever draws the valve of the first pump to the left. This admits steam to the right of the first piston and sends it to the left.

There is a slight pause at the end of each stroke while one piston waits for its valve to be moved by the other. This pause is claimed to be an advantage since it allows the water valves to seat properly and noiselessly.

The section through the cylinder (Fig. 127) shows two ports at each end of the cylinder. The outer one is for live steam and the

inner one for exhaust. The valve has neither lap nor lead on either the steam or exhaust side. Toward the end of the stroke

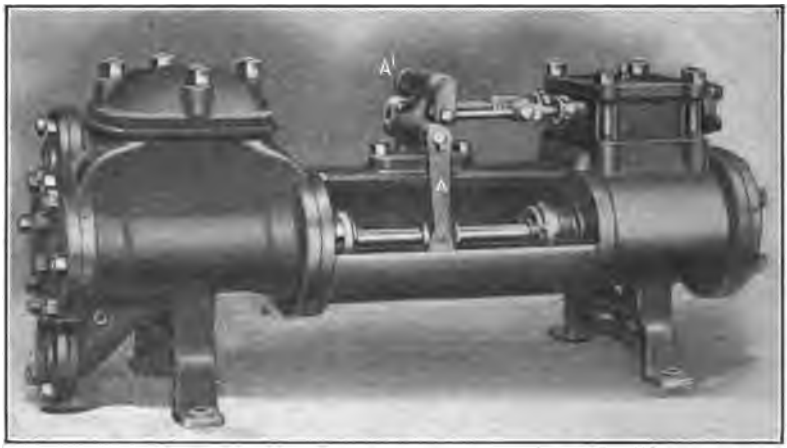

FIG. 126.—Worthington duplex pump.

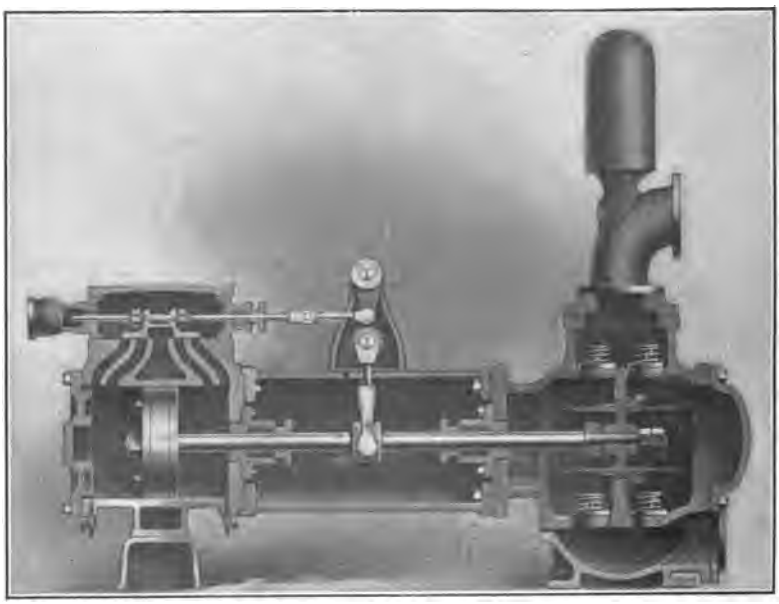

FIG. 127.—Longitudinal section of Worthington pump.

the piston covers the exhaust port and entraps some steam between it and the cylinder head, the steam port being covered by

the valve. This entrapped steam cushions the piston and brings it to rest quietly.

On some of the larger pumps (14″ or more in diameter) it has been found advantageous to regulate the amount of cushioning by placing a valve between the steam and exhaust ports. This valve, called a *dash relief* or *cushion valve* is shown in Fig. 128. It is so adjusted as to allow some of the cushion steam to leak out into the exhaust. This permits the piston to take a somewhat longer stroke.

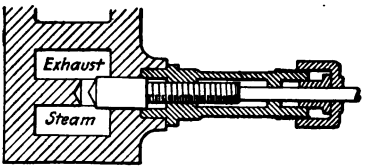

FIG. 128.—Cushion valve.

The Blake-Knowles valve gear (Figs. 129 and 130) consists of a main valve 1, an auxiliary valve 2, working on the back of the main valve, and an auxiliary plunger 3, working in an auxiliary cylinder 4, which is bolted to the main cylinder 5.

The main valve 1 is controlled by the movements of auxiliary plunger 3. The auxiliary valve 2 is actuated by valve rod 6 and valve rod link 7, which are moved by lever 8, tappet 9, and adjustable collars 10 and 11. The auxiliary valve travel is at right angles to that of the main valve.

The main cylinder 5 is so designed that the steam ports for each end are arranged on opposite sides of the center line, hence, in the sectional view only the ports for one end fully appear. Of these 12, 13 and 14 are the main steam ports; 15 is the starting port and 17 and 18 the auxiliary ports. The small drilled hole 19 connects the main and starting ports and serves as a cushion relief. The main valve is provided with auxiliary ports, 21, 22 and 36, and the auxiliary cylinder with one port at each end, of which 17 (Fig. 129), leading to right-hand end, shows a partial view, and 18 (Fig. 130), leading to left-hand end, shows a full view.

The main steam inlet is at 25 and entering steam passes up through passage 26 into chamber 27 in the auxiliary cylinder. The exhaust outlet is at 28.

Assume main valve 1 and auxiliary plunger 3 to be at the right, as shown (Fig. 130), being held in this position by steam, which is admitted by ports 21 and 18 to the left of auxiliary plunger 3. With the main valve in this position steam will pass through the starting port, corresponding to 15 but at the opposite end of the

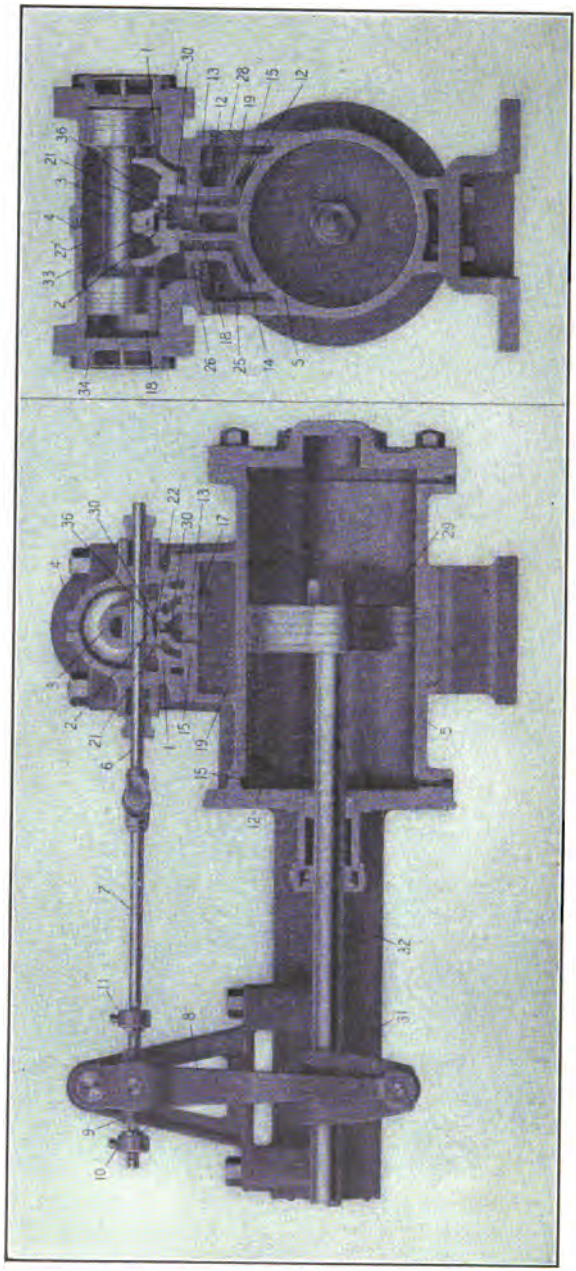

FIG. 129. Steam End of Blake-Knowles Pump.

FIG. 130.

cylinder, and main port 14, to the right of main piston 29, Fig. 129, causing it to move to the left, steam exhausting at the same time from the opposite side of main piston, through port 12 to cavity 30 in main valve 1, and out to exhaust opening 28 through port 13 in main cylinder 5.

As the main piston 29 nears the end of its stroke, lever 8, carrying with it tappet 9, and actuated by cross-head 31 on main piston rod 32, engages with collar 10 and moves valve rod link 7, valve rod 6, and auxiliary valve 2, to the left until auxiliary port 22 is opened to admit steam to the right of auxiliary plunger 3, while auxiliary port 21 is opened for exhaust.

Steam is now admitted at the right of auxiliary plunger 3, through ports 22 and 17, while at the same time steam is exhausted from the left of auxiliary plunger 3, through ports 18, 21, cavity 33 and port 36. The auxiliary plunger 3 and main valve 1 are moved to the left until port 21 is closed to exhaust by the edge of cavity 33 in auxiliary valve 2. Port 21 being closed, auxiliary plunger 3 cushions on the steam confined between its end and auxiliary cylinder head 34, coming to rest with main valve 1 in proper position for the return stroke of main piston.

The main port 12 enters the cylinder at some distance from the end, and after main piston 29 moves over and closes the port, the only outlet for the exhaust steam is through starting port 15 and cushion relief hole 19. Owing to this restriction of the exhaust outlet the speed of the main piston is reduced as it approaches the end of its stroke, before steam is admitted for the return stroke, thus permitting the pump valves to seat quietly and the movement of the piston to be reversed without shock.

CHAPTER XI

REVERSING GEARS

Engines which must be reversed in direction of rotation, frequently, on account of their particular application must be equipped with some form of valve gear which will permit this being done easily by the operator. Among the most common gears of this kind may be mentioned:

1. The Stephenson Link Motion.
2. The Walschaert Valve Gear.
3. The Joy Valve Gear.

Besides providing a means of reversing the engines at will, these gears also permit the cut-off to be varied by the operator while the engine is running.

The Stephenson Link Motion.—In past years the Stephenson link motion (invented in 1843) received more attention in this country than the other gears mentioned and was extensively used on hoisting engines, marine engines, and especially on locomotives. Until about 1904, practically all the locomotives in the United States were equipped with this gear.

Possibly the idea of the Stephenson link motion grew out of the fact that an engine can be reversed by shifting the eccentric from position *Od* (Fig. 131) to position *Od'*. If a disk with a slot *dd'* is keyed to the end of the shaft and the end of the eccentric rod is fitted with a block which can be slid along the slot *dd'* and secured at any desired point, the angular position and the length of the eccentric arm can be changed at will. Thus the eccentricity might be *Od*, *Od''*, or *Od'*. When the eccentric radius is in the neighborhood of *Od''* the angle of advance is greater and the eccentricity less than *Od* and an earlier cut-off is obtained; a shift past the point *d'''* would reverse the engine.

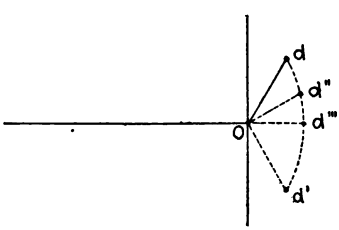

FIG. 131.

The practical mechanism, incorporating the general ideas expressed above, is shown diagrammatically in Fig. 132. It

will be noted that the link between the two eccentrics has been moved away from the shaft, *O*, and that eccentric rods have been inserted. The link can be shifted by means of a bell crank lever so that *d* or *d'* or any intermediate point along the link will stand opposite the block *b* in the end of the valve rod. The arm by which the link is shifted is at one side of the link, thus allowing the latter to swing in the plane of motion of the valve. If the link is shifted downward so that *d* is opposite the block, the valve will receive motion from eccentric *Oe* alone; if the link is shifted to the other extreme position so that *d'* is opposite the block the valve will receive motion from eccentric

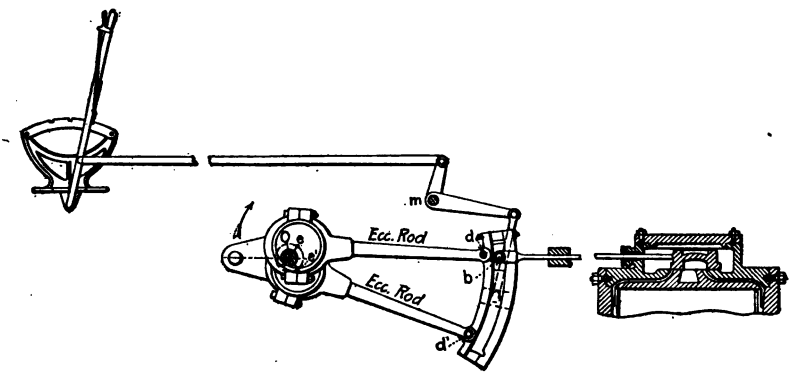

FIG. 132.—Stephenson link mechanism.

Oe' alone; but for any position of the link between these two extremes the valve will receive motion from a virtual or equivalent eccentric whose angular position is somewhere between *Oe* and *Oe'*, and whose radius is something less than *Oe*.

Locomotives have two engines with cranks at right angles, and each valve gear is provided with a link. Both links are shifted simultaneously by means of a lever in the cab which rotates the shaft *m*.

When the link is in such a position that *d* (Fig. 132) is in line with *b* it is said to be in *full gear ahead;* when in such a position that *d'* is in line with *b* it is in *full gear back*. When *b* is half way between *d* and *d'* the link is in *mid gear*. Shifting the link from the full gear toward the mid-gear position is termed *notching up* or *hooking up*. Positions intermediate between mid-gear and full gear are expressed in fractions of the shift from mid to full gear. The mechanism is made

so that the lever on the notched arc in the cab is relatively in the same position as the block in the link.

When starting the engine the link should first be thrown into the full-gear position so that a late cut-off will be obtained; then with the throttle partly open a powerful, steady force will be exerted on the drivers. As the inertia is gradually overcome and the engine increases in speed the link should be hooked up to give an earlier cut-off and better steam distribution.

It is necessary to distinguish between two possible arrangements of the eccentric rods. If the rods stand clear of each other when the eccentrics are between the link and the

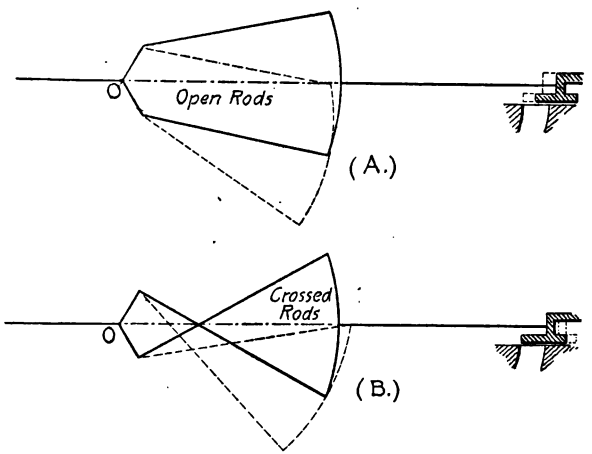

FIG. 133.—Open rods and crossed rods and their effect on lead.

vertical through O, as shown in Figs. 132 and 133(A), they are called *open rods*. If they stand as shown in Fig. 133(B) they are called *crossed rods*. The most important difference in these two arrangements of rods is the effect on the lead when the link is shifted. With open rods, shifting the link from mid-gear to full-gear position decreases the lead as shown in Fig. 133(A). Fig. 133(B) shows the opposite effect for crossed rods. The amount of variation of lead from mid to full gear depends on the radius of curvature of the link and is increased as the radius is decreased.

Approximate Layout.—A convenient method of obtaining the approximate solution of link motion problems is by means of what is known as an *equivalent* or *virtual* eccentric. An *equivalent eccentric* is an imaginary eccentric which, if used, would give

nearly the same movement to the valve as the more complicated gear. The following method of finding the equivalent eccentric is often used for open rods; a similar method can be used for crossed rods, but as crossed rods are seldom used that construction will not be discussed here.

The point of cut-off when in full gear should be chosen at about 85% of the stroke and the valve allowed to overtravel the port about one-fourth of the width of the port. A lead of 1/16″ may be assumed. Construct a Bilgram diagram to determine the length of the equivalent eccentric and its angle of advance for latest cut-off.

The general proportions of the engine on which the link motion is placed usually determine the length of the eccentric rods. The distance from the center of the eccentric to the center of the link arc, measured along the eccentric rod, is usually taken for the radius of the center of the link arc.

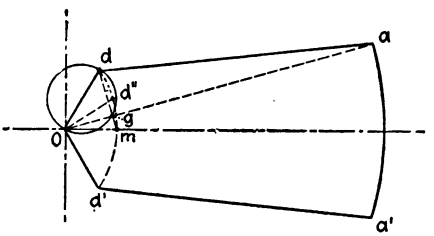

FIG. 134.—Graphical determination of equivalent eccentric for open rods.

Having decided upon the general proportions of the gear, a skeleton diagram can be laid out as shown in Fig. 134, with the equivalent eccentric for full gear represented by *Od* and *Od′*. On *Od* as a diameter construct a circle and by drawing *Oa* and *dgm* through the intersection point, *g*, locate the point *m* on the axis line. Through *d*, *m*, and *d′* draw a circular arc; this will give the locus of all equivalent eccentrics for various link positions. When the link is in half gear it will give a motion to the valve which is approximately the same as the motion which it would receive from a single eccentric *Od″*, where *d″* is half way between *d* and *m*. *Od″* represents the equivalent eccentric, both in radius and angular position. When the link is in mid-gear the motion of the valve will be approximately the same as it would receive from an equivalent eccentric *Om*.

The equivalent eccentric being known, the motion of the valve may be analyzed for any assumed position of the link as in the case of a simple gear, but it must be remembered that this method gives results which are only approximately correct.

The Walschaert Valve Gear.—The *Walschaert* valve gear belongs to the general class known as *radial gears*. In this class

are included a number of mechanisms which give practically harmonic motion to the valve and enable the steam distribution and the direction of rotation to be altered.

A Swiss named Egide Walschaerts invented the Walschaert gear in 1844 so that it is about as old as the Stephenson link motion. For many years it has been used on locomotives in continental Europe but was almost unknown in this country until after 1900. The American Locomotive Company is now equipping nearly all of its locomotives with the Walschaert gear for the following reasons:

In modern locomotives the use of an outside valve gear is practically necessary, because with the weight and power of the

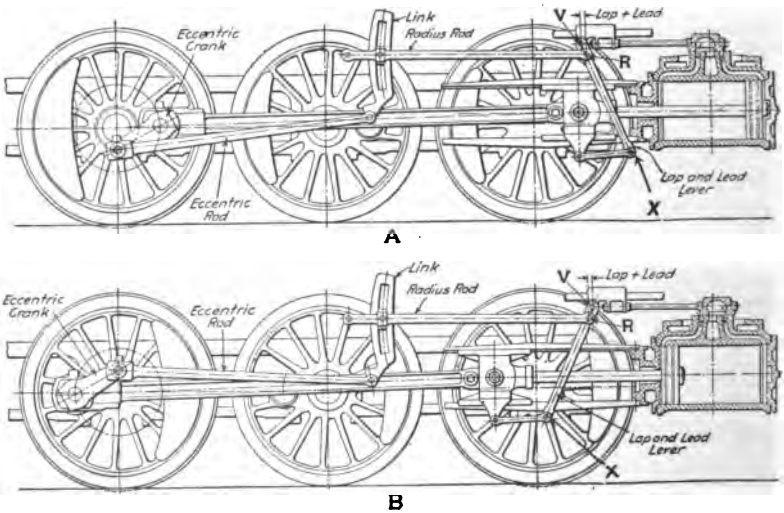

FIG. 135.—Walschaert valve gear.

locomotives of today it is almost impossible to get a satisfactory design of Stephenson link motion between the frames. The parts are necessarily so large that there is hardly room for them. With the Walschaert valve gear, which is outside of the frames, this difficulty is overcome.

In the modern locomotive the eccentrics and straps of the Stephenson link motion are necessarily very heavy and wide. The rubbing speed is consequently high and results in rapid wear. This, in combination with the rockers and transmission bars, permits the accumulation of a great amount of lost motion in the

gear. With the Walschaert valve gear there are no large eccentrics, only hardened pins and bushings. As a result it is much more easily maintained than the Stephenson motion.

Being located outside of the frames, the Walschaert gear is easily accessible for proper lubrication and attention by the engineer.

By removing the valve gear from between the frames a better opportunity is afforded to introduce stronger frame bracing, thus reducing the possibility of frame failure.

Fig. 135 shows the arrangement of the parts which make up the Walschaert gear. Two positions of the mechanism are shown, *A* for admitting steam at the forward end, and *B* for admitting steam at the back end. Fig. 136 is a skeleton diagram of the gear. The *link* is trunnioned at its middle point and rocked by means of an *eccentric rod* whose motion is derived from an *eccentric crank* secured to the main crank pin. The movement of the link is transmitted

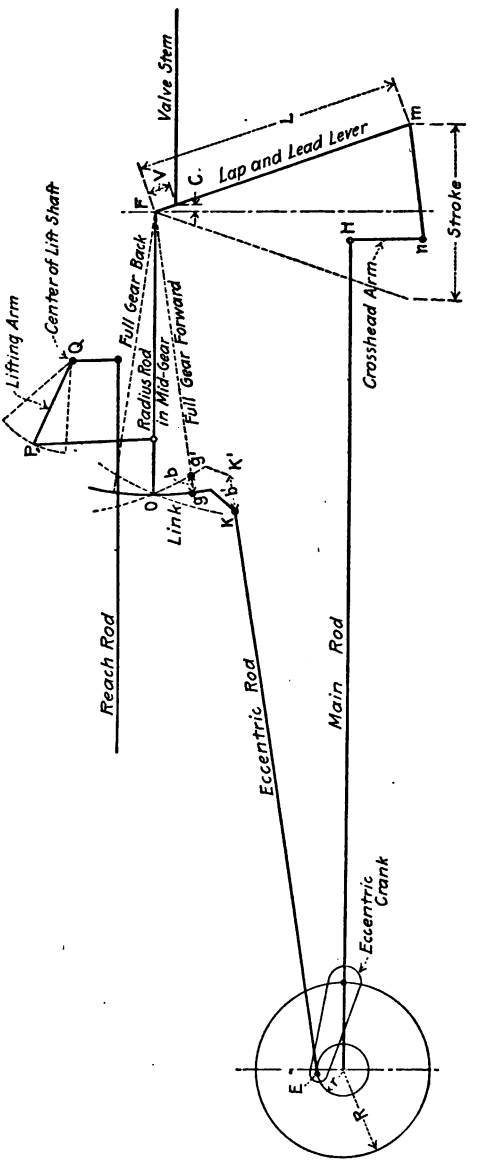

FIG. 136.—Skeleton diagram of Walschaert valve gear.

to the valve stem by a *radius rod* whose length is equal to the radius of curvature of the link. Pinned to the radius rod is a block which slides in the link when the radius rod is raised or lowered by the engineer. When the block is above the link fulcrum the engine runs in one direction, and when below the fulcrum the engine runs in the opposite direction.

The eccentric crank is so set that, when the engine is on either dead center the link stands in its middle position and if the radius rod were attached directly to the valve stem, the valve would also be in its mid-position regardless of whether the block were up or down in the link. However, when the piston is at the end of its stroke the valve should be displaced from its mid-position by an amount equal to the lap plus the lead. In the Walschaert gear this is accomplished by the use of a lever, called the *lap and lead lever*, which is attached to both the valve stem and the radius rod and is also connected, through a suitable rod, to the crosshead. This lap and lead lever is so proportioned that if the point of its connection to the radius rod be kept a stationary fulcrum and the engine piston moved a distance equal to the stroke the valve will be moved a distance equal to twice the lap and lead. When the piston is at the end of its stroke the valve is displaced from its mid-position a distance equal to the lap plus the lead. Inasmuch as the position of the valve, when the piston is at the end of its stroke, is dependent on the lap and lead lever alone, it is evident that the *lead* given by the Walschaert gear is the same for all points of cut-off.

There are two arrangements of the Walschaert gear, depending on whether it is to be used with outside admission or inside admission valves. With a valve having *outside* admission the valve stem is connected to the lap and lead lever at a point *above* the latter's connection to the radius rod (see Fig. 135). If the block is in the *lower* half of the link when in forward gear, the eccentric crank *leads* the main pin. If the block is in the *upper* half of the link when in forward gear, the eccentric crank *follows* the main pin.

With a valve having *inside* admission the valve stem is connected to the lap and lead lever at a point *below* the latter's connection to the radius rod (see Fig. 136). If the block is in the *lower* half of the link when in forward gear the eccentric crank *follows* the main pin. If the block is in the *upper* half of the link when in forward gear, the eccentric crank *leads* the main pin.

The diagrams in Figs. 137 and 138 represent the various valve events throughout a complete revolution of the wheels. Comparison between corresponding diagrams in the figures shows

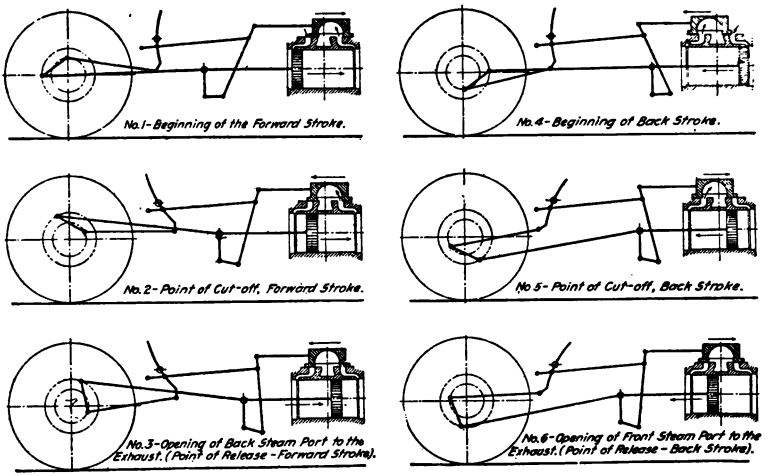

FIG. 137.—Walschaert gear and outside admission valve. Various important positions during revolution.

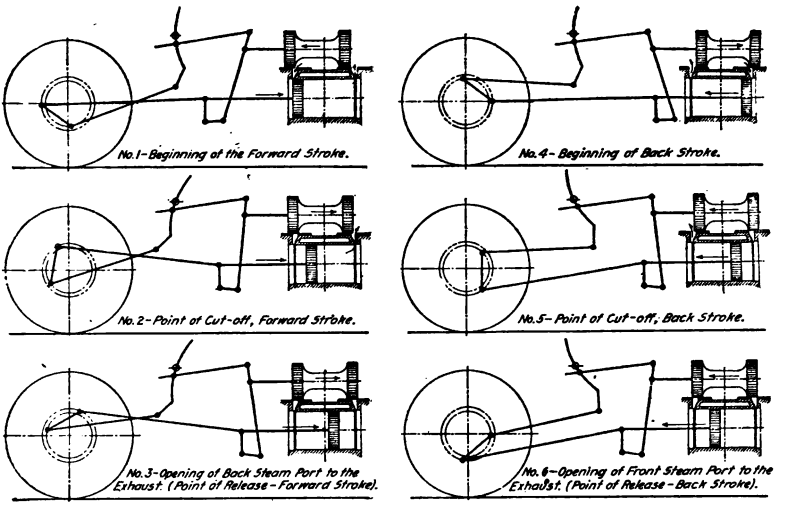

FIG. 138.—Walschaert gear and inside admission valve. Various important positions during revolution.

clearly the difference in the arrangement of the Walschaert valve gear for *outside* and *inside* admission valves.

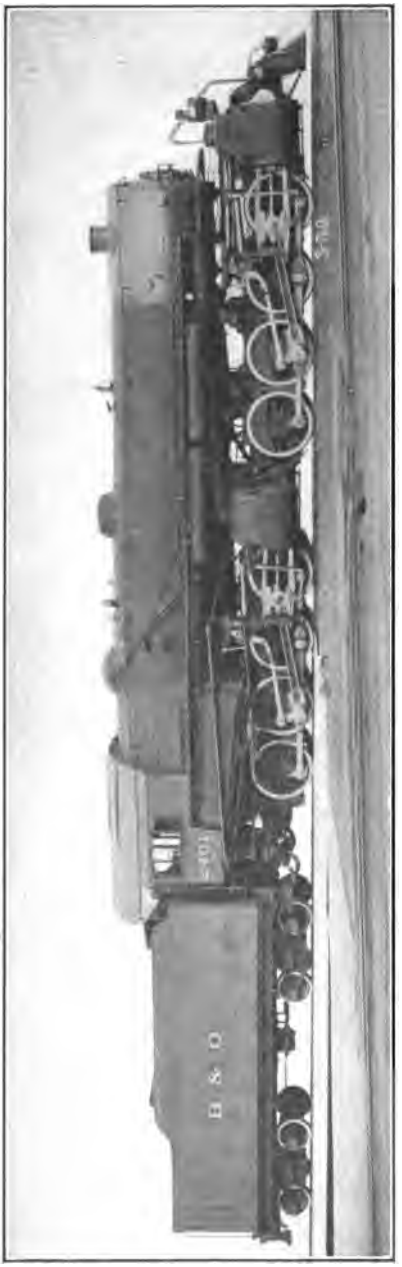

FIG. 139.—Mallet articulated compound locomotive with Walschaert valve gears.

Fig. 139 shows a Mallet articulated compound locomotive equipped with the Walschaert gear. An interesting feature of this engine is that the forward cylinders, which are the low pressure, have flat valves admitting steam outside, while the rear cylinders, the high pressure, have piston valves admitting steam inside.

The general arrangement of the Walschaert valve gear depends largely on the general design of the locomotive. The proper lengths of the arms of the lap and lead lever for any desired lap and lead may be determined by the formula:

$$S = \frac{V \times L}{2C} = \frac{2VL}{V}$$

in which

S = length of stroke (see Fig. 140.)

V = distance from valve stem to radius rod connection.

L = distance from radius rod connection to bottom connection.

C = lap plus lead.

It has been seen that with the Walschaert gear the valve receives motion from two different sources,

the eccentric crank and the cross-head. For a rough analysis of the motion, it is convenient to determine some equivalent eccentric which acting alone would move the valve the same as it is moved by the combined action of the eccentric crank and cross-head.

In Fig. 136, Og represents the link of the Walschaert gear in its mid-position, the trunnion being at O. The dotted line Og' represents the link at some other time in the stroke. The

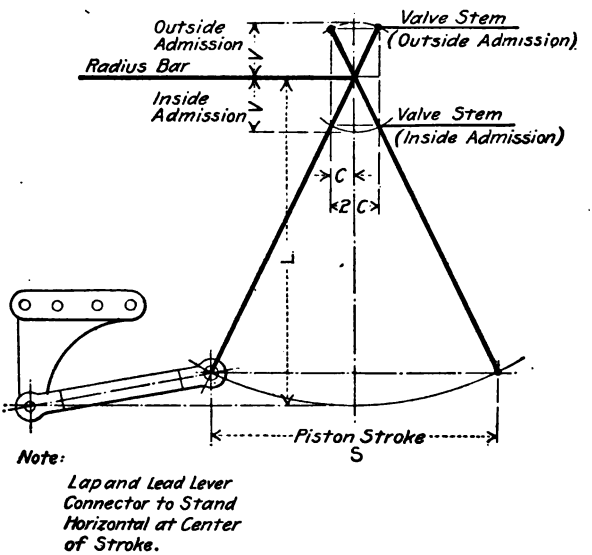

FIG. 140.—Lap and lead lever.

points g and g' indicate the positions of the block, and K and K' the end of the eccentric rod. The block attached to the radius rod is displaced the distance b and this displacement, slightly affected by angularity, is transmitted to the pin F connecting the radius rod with the lap and lead lever.

The movement of the link to the dotted position is caused by a crank rotation through some angle θ which causes the eccentric center to move horizontally through the distance $r \sin \theta$ and, neglecting angularity, the horizontal movement of F is $r \sin \theta \frac{Og}{OK}$, where Og and OK are straight-line measurements. Imagining the cross-head to be stationary,

the movement received by the valve from the eccentric is $r \sin \theta \frac{Og}{OK} \frac{(L - V)}{L}$.

In Fig. 141 draw any crank position and lay off OE_1 as shown, equal in length to $r \frac{Og}{OK} \frac{(L - V)}{L}$. Then $Os = r \sin \theta \frac{Og}{OK} \frac{(L - V)}{L}$ and OE_1 is the simple eccentric which is equivalent to the mechanism operated by the eccentric crank when the radius rod is in the position shown in Fig. 136. If the block is above the trunnion of the link, OE_1 should be laid off in the opposite direction in Fig. 141.

Besides the motion received from the eccentric crank, through the link, the valve receives motion from the cross-head through

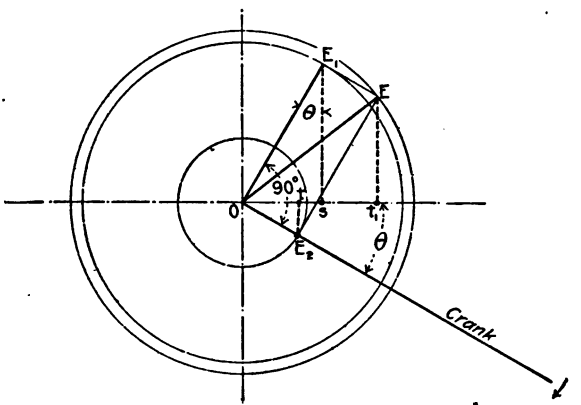

FIG. 141.—Development of equivalent eccentric for Walschaert gear.

the lap and lead lever. When the crank has moved through the angle θ the point m (Fig. 136) is displaced from mid-position a distance $R \cos \theta$, which is modified to $R \cos \theta \frac{V}{L}$ at the valve. This movement could be obtained from an eccentric OE_2 (Fig. 141) set in line with the crank, where $OE_2 = R \frac{V}{L}$; then $Ot = R \cos \theta \frac{V}{L}$ = horizontal displacement of the valve due to the movement of the lap and lead lever. If an outside admission valve is used OE_2 should be drawn on the other side of the shaft from the crank.

It will be seen that when the cross-head is at the middle of its stroke, which will be when θ is 90° if angularity is neglected,

the valve receives its motion from the link mechanism, represented by the equivalent eccentric OE_1, and Ot is zero. Also, when the cross-head is at one end of its stroke the distance Ot will be a maximum and Os zero, meaning that the valve receives its motion from the cross-head. By drawing E_1E equal and parallel to OE_2, $st_1 = Ot$, and $Ot_1 = Os + Ot$. Therefore OE represents the single equivalent eccentric which would produce the same valve displacement as OE_1 and OE_2 combined.

It must be clearly understood that the use of an equivalent eccentric gives only the approximate valve motion and neglects any distortions due to angularity of the rods. In design work or careful analysis, it is necessary to lay out the gear very accurately on the drawing board and follow the various parts through a complete revolution to determine the exact movement of the valve. This should be done for at least two cut-offs, the latest one and the one at which the engine will be operated most of the time.

In laying out the gear the following proportions represent good practice:

Radius rod length at least 8 times the travel of the link block, 10 or 12 is better.

Eccentric rod length at least 3 1/2 times the eccentric throw; should be as long as circumstances will permit with practically equal lengths of radius rod and eccentric rod.

Angle of swing of link should not be more than 45°.

Angle of oscillation of lap and lead lever, 45° to 50° is good; it should always be less than 60°.

The Walschaert valve gear can be designed to give a variable lead. This practice has been followed recently in a number of cases. With a variable lead the longest possible cut-off in starting can be obtained, combined with the proper amount of lead at the ordinary running cut-off. In the case of passenger locomotives particularly, a steam distribution like this is often most desirable. The favorable results for starting are obtained, however, at the expense of the distortion of the valve events in the back motion. For this reason, the Walschaert valve gear with variable lead is suitable only for passanger and fast freight locomotives, and not for slow freight and switching locomotives.

With a variable lead so arranged that the lead increases as the reverse lever is hooked up, the eccentric crank lags behind the correct position for a constant lead; in other words, it is

so set that the link is not in its central position when the crank pin is on center.

The Joy Valve Gear.—Fig. 142 shows a reversing gear, credited to David Joy, in which the use of an eccentric has been avoided altogether. The whole movement is derived from a point, *a*, near the middle of the connecting rod. Point *d* is fixed on the frame of the engine and *k* moves in an arc with *d* as a center, while points *a* and *b* trace oval curves as indicated in the figure, the major axis of the larger oval being equal to the stroke of the piston. As the point *b* traces its curve, point *e* slides up and

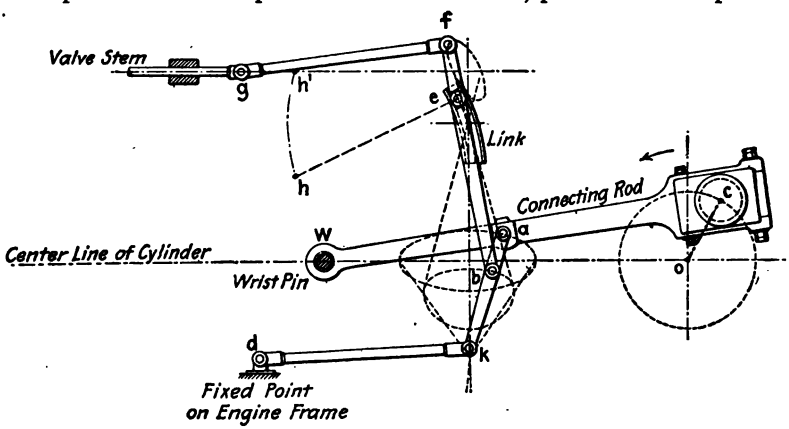

FIG. 142.—Joy valve gear.

down in the curved guide or link. The point *f* of the rod *feb* traces an approximate ellipse, and the travel of the valve is equal to the distance between two lines drawn perpendicular to the line of motion of the valve and tangent to the ellipse on either side.

A change in the inclination of the link cause a change in the shape of the ellipse at *f* and a change in the valve travel and steam distribution. If the link is turned to the other side of the vertical axis, the engine will be reversed.

Sometimes instead of the link a radius rod, *he*, is used, with *h* a movable point which can be held fixed in any desired position on the path *hh'*. The same effect as shifting the link is then obtained by shifting the point *h* thus changing the center of the arc in which *e* moves.

The equivalent eccentric can be found for any position of the link. The method is illustrated in Fig. 143, in which OE_1 is

laid off along the crank line equal in length to $\frac{fe}{eb} \cdot \frac{bk}{ak} \cdot OC$, and E_1E_2 is perpendicular to OE_1 and equal to $\left(1 + \frac{fe}{eb}\right)\frac{Wa}{WC} OC \cdot \tan \alpha$, in which α is the angle of inclination of the link. The equivalent eccentric for the position of the link corresponding to the angle α is OE_2.

The validity of this construction can be proven by means of a skeleton diagram of the mechanism as shown in Fig. 144. The curved link or guide for the point e has been modified into

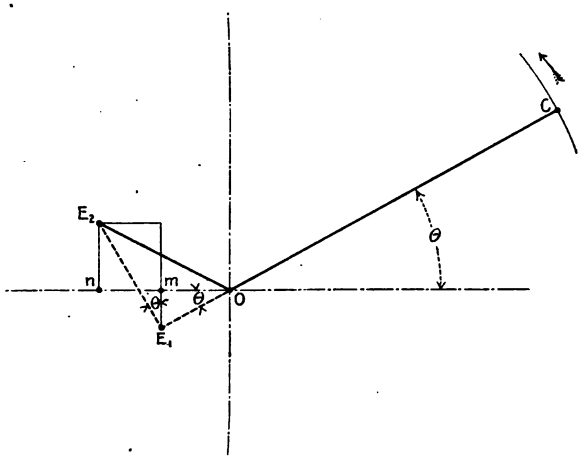

FIG. 143.—Equivalent eccentric for Joy valve gear.

a straight line and represented by AA. It is further assumed that the rod fg, connected to the valve stem, has no angular vibration, *i.e.*, that the point g has the same movement as f. OF is laid off equal to aC and a line is drawn through F perpendicular to OW; this line will pass through the fulcrum of the link. If the pin at C were removed and the end of the connecting rod brought to O, a would coincide with F, and the points f, e, a, b, k would fall on the vertical dotted line through F.

Except for the effect of angularity, a receives the same horizontal movement as W. The point k travels on an arc and the combined movements of the points k and a counteract the distortions due to angularity, so that the horizontal movement of the point b is almost perfectly harmonic. This being the case we may neglect the angularity of WC and assume that k travels

in a straight line; then the horizontal displacement of the point b, from the line through F, is given by the expression

$$h_1 = \frac{bk}{ak} OC \cdot \cos \theta$$

The vertical displacement of a is equal to the vertical movement of C multiplied by the ratio $\frac{Wa}{WC}$. The distortions due to the angularity of the rod *feb* pivoted at e practically counteract those of the rod *ka* pivoted at k, because they are opposite

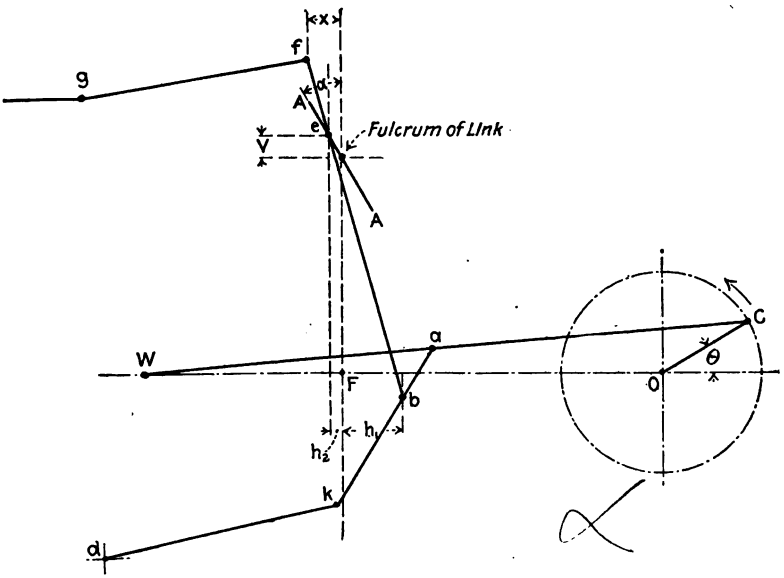

FIG. 144.—Skeleton diagram of Joy valve gear.

in direction. The vertical displacement of the point e from the fulcrum of the link can then be written:

$$v = \frac{Wa}{WC} OC \sin \theta$$

On account of the path over which e travels being inclined from the vertical, the movement of e along that path causes e to be displaced horizontally as well as vertically. This horizontal movement is equal to $v \tan \alpha$, or

$$h_2 = \frac{Wa}{WC} OC \sin \theta \tan \alpha$$

and must be added to h_1 to give the total horizontal movement of the point b;

$$h_1 + h_2 = \frac{bk}{ak} OC \cos\theta + \frac{Wa}{WC} OC \sin\theta \tan\alpha$$

The horizontal movement of the point f will be

$$X = h_2 + (h_1 + h_2)\frac{fe}{eb} = \left(1 + \frac{fe}{eb}\right)h_2 + \frac{fe}{eb} h_1$$

$$= \left(1 + \frac{fe}{eb}\right)\frac{Wa}{WC} \cdot OC \cdot \sin\theta \cdot \tan\alpha + \frac{fe}{eb} \cdot \frac{bk}{ak} OC \cdot \cos\theta$$

In Fig. 143, $Om = OE_1 \cos\theta$

$$= \frac{fe}{eb} \cdot \frac{bk}{ak} \cdot OC \cos\theta$$

and $mn = E_1E_2 \sin\theta$

$$= \left(1 + \frac{fe}{eb}\right)\frac{Wa}{WC} OC \tan\alpha \sin\theta$$

Therefore $On = X$

and this movement can be secured from an eccentric OE_2 set as shown in the figure. Hence the equivalent eccentric for the gear is OE_2.

PROBLEM 15

In Fig. 144 take $OC = 12''$, $Ca = 4'\ 0''$, $aW = 3'\ 0''$, $ab = 7''$, $bk = 12''$, $dk = 2'\ 0''$; perpendicular distance of d from $WO = 1'\ 7''$, horizontal distance of d from $O = 6'\ 0''$; $bf = 2'\ 0''$, $ef = 3''$, $fg = 3'\ 6''$; radius of link $2'\ 0''$, center of curvature of link $7''$ above WO and $5'\ 11''$ to the left of O.

Find (1) horizontal displacement of b.

(2) vertical displacement of b.

(3) travel of valve and angle of advance of equivalent eccentric.

CHAPTER XII

CORLISS VALVE GEARS

In the United States, England and France the Corliss is the predominating type of large reciprocating engine. The form of the valve gear limits the speed of operation, and 100 to 125 R.P.M. represents usual practice.

The Corliss valve gear was invented by George H. Corliss in 1850. Corliss realized that a radical change in design was necessary to improve the economy of the steam engine and the valve gear which bears his name is very different from the older types. (Fig. 145 shows the common form of Corliss engine with the various parts of the gear labeled.) Four valves are used, one in each corner of the cylinder, with their axes perpendicular to the cylinder bore and to the plane of rotation of the flywheel. On account of the location of the valves, the ports leading from the valve seats to the cylinder can be made short and the engine clearance thus kept low; it usually ranges between 2% and 6%. The two upper valves regulate the live steam, and the two lower ones the exhaust.

Instead of sliding back and forth with straight line motion these valves move in an angular oscillation about their axes. (This can be considered as a modification of and not essentially different from the ordinary sliding motion. Common forms of Corliss valves are shown in Fig. 146; they are made single ported and multiple ported, and the advantages of multiple ports are the same as in the case of slide valves.) The valves extend clear across the cylinder in holes bored from side to side. These holes are closed at the back by flat plates and at the front by castings called *valve bonnets*. At each end of the valve a short, completely cylindrical portion forms the bearing. The valve is rocked by a *valve spindle* which has a bearing and a stuffing box in the valve bonnet and terminates in a tongue which fits in a slot extending diametrically across the front end of the valve. (Fig. 147 shows a valve bonnet and the manner of connecting the valve and the end of the spindle.)

On account of the great distance between the crank-shaft and the cylinder it is necessary to add a *rocker arm*, dividing the

FIG. 145.—Corliss engine.

eccentric rod into two, the *reach rod* and the *eccentric rod* proper. (See Fig. 145).

Motion received from the eccentric is transmitted through the

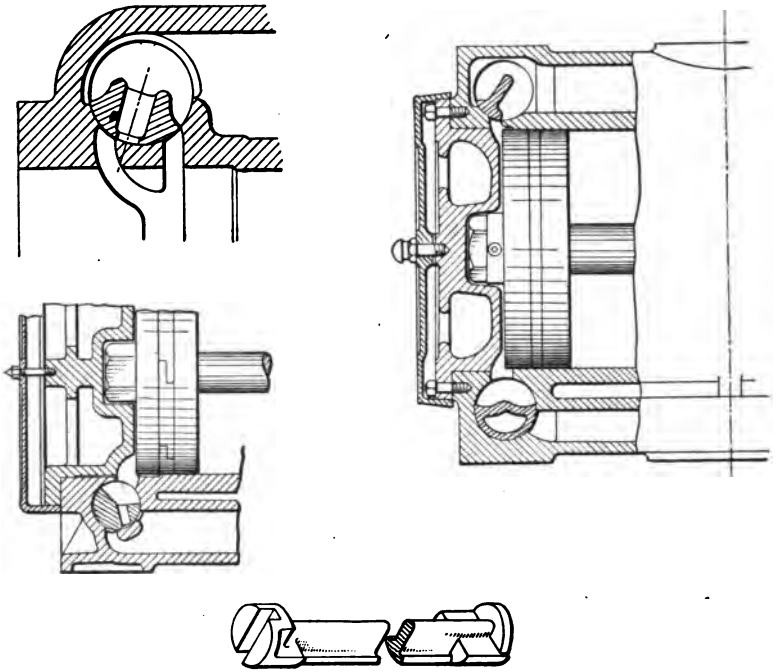

FIG. 146.—Common forms of Corliss valves.

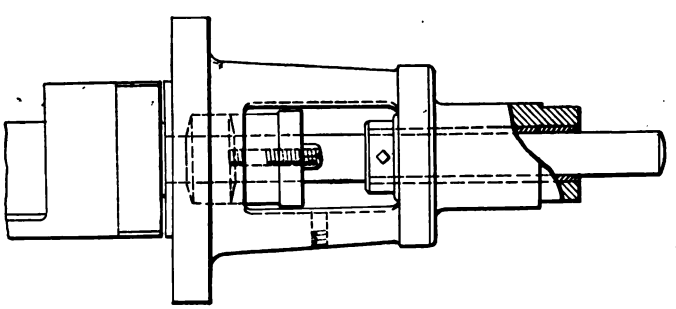

FIG. 147.—Corliss valve bonnet.

eccentric rod, rocker, and reach rod to the *wrist plate* which oscillates about a stud fastened to the engine cylinder. Each valve receives a rocking motion by means of a *valve rod* connecting it to the wrist plate.

The Wrist Plate.—In Fig. 148 is shown a line diagram of the eccentric, rocker arm and wrist plate. The eccentric rod is attached to the rocker arm and as the eccentric turns from f to f' the end of the rod moves from l to l' and the rocker arm swings

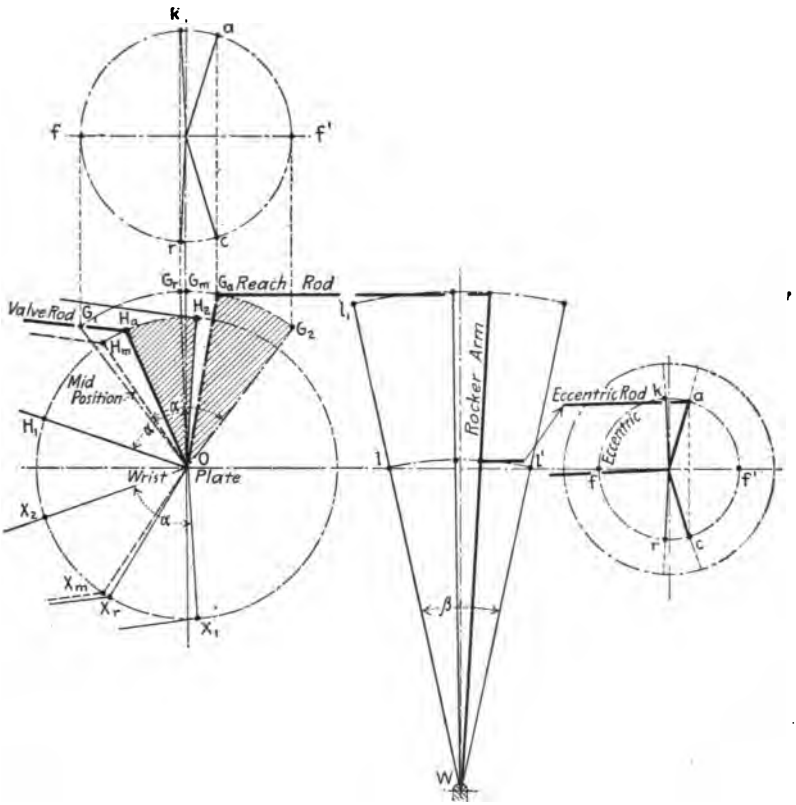

FIG. 148.—Line diagram of eccentric, rocker arm and wrist plate.

through the angle β. The distance ll' is equal to the diameter of the eccentric circle, ff'. At the upper end of the rocker arm is attached the reach rod running to the wrist-plate. The movement of the reach rod and the point l_1 is the movement of l magnified by the ratio of the lever arms l_1W and lW. G, with various subscripts, represents the pin on the wrist plate to which the reach rod is attached (see also Fig. 145); H with various subscripts represents the pin to which the steam

valve rod is attached, and X the pin to which the exhaust valve rod is attached.

The angle G_1OG_2 equals the angle H_1OH_2, equals the angle X_1OX_2, each being the angle through which the wrist plate is oscillated by the reach rod. Vertical lines have been projected from G_1 and G_2 and the horizontal distance between them, which equals the horizontal movement of the upper pin in the rocker arm, has been taken as the diameter of the path of an equivalent eccentric whose movement is the same as the one on the crank shaft but magnified by the rocker arm.

When the eccentric turns from its inner extreme position to its outer extreme position G_1 moves to G_2, H_1 to H_2, and X_1 to X_2, with approximately harmonic motion. This motion in being transmitted to the valves, is considerably modified by the obliquity of the rods so that the motion of the valves is far from harmonic. The valves move rapidly in opening the ports, but slowly during the idle period.

When the wrist plate is in mid-position the point which has extreme positions H_1 and H_2 (Fig. 148) stands at H_m. If the eccentric is at a for admission, the wrist plate has moved through the angle H_mOH_a from mid-position. Similarly, when release occurs and the eccentric is at r, the wrist plate has swung to the other side of mid-position through the angle G_mOG_r, which is equal to X_mOX_r, and the pin connecting the exhaust valve rod stands at X_r. As the eccentric continues its rotation X_r swings to X_1, when the eccentric is at f, and then back again so that when the eccentric is at the compression position, k, the pin is again at X_r but moving toward the left.

The Valve Motion.—A skeleton drawing is shown in Fig. 149 in which O_1 represents the valve center and O the wrist plate center. With O_1B_1, the length of the valve arm as a radius, a circle has been drawn about O_1 and tangent to this a line passing through O. Then OH_1 represents the wrist plate arm, H_1B_1 the steam valve rod and B_1O_1 the steam arm, in one extreme position. This is often called the *stretched position*. If the total swing of the wrist plate is through the angle H_1OH_2, the other extreme position of these parts is shown as $OH_2B_2O_1$. As the motion of the wrist plate is approximately harmonic the two halves of the angle H_1OH_2 are traversed in equal intervals of time. By drawing OH_m midway between H_1 and H_2 and with the length of the valve rod as radius locating the point B_m, it will be seen

that while the wrist plate moves through half its angle, or H_1OH_m, the valve only moves through $B_1O_1B_m$, or about a third of its angle of oscillation. During the second half of the wrist plate motion the valve moves faster, traversing the angle $B_mO_1B_2$ in the same time that it traversed $B_1O_1B_m$. The period of

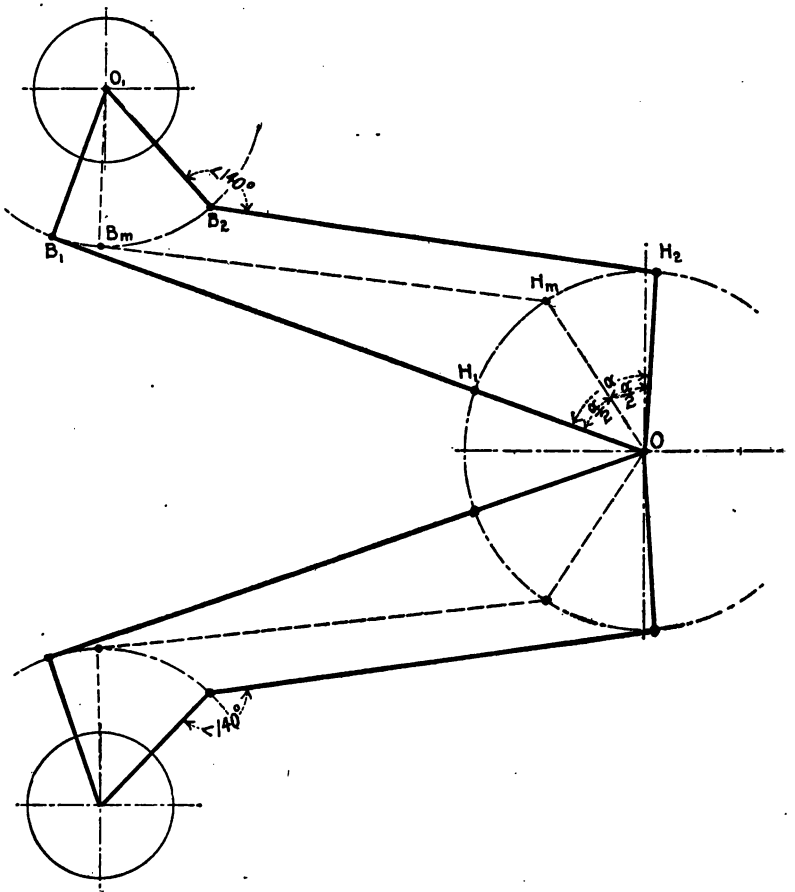

FIG. 149.—Diagram of Corliss gear, showing effect of wrist plate.

faster movement is used for the working period and the period of slower motion for the idle period. This movement of the valves due to the *wrist plate effect* is one of the advantages of Corliss engines. It is during the idle period that the valve is most unbalanced due to full steam pressure on one side. By reducing the amount of movement during this period the fric-

tional work necessary to operate the valve is greatly reduced. The rapid opening and closing during the working period reduces wire drawing and gives sharp corners on the indicator cards.

It is not always possible to locate the centers O and O_1 in such a way that the angle $O_1B_1H_1$ is 90° without having the angle $O_1B_2H_2$ very large. The latter angle should not exceed 140° because then the force along the link H_2B_2 would produce a heavy direct stress on the arm O_1B_2 and very little turning moment. The same consideration limits the angle $O_1B_1H_1$ to a minimum of 40°. When the angle $O_1B_1H_1$ is made less than 90° the angle $B_1O_1B_m$ approaches $B_mO_1B_2$ and the wrist plate effect is reduced. Therefore it is desirable to make the angle $O_1B_1H_1$ as near 90° as possible.

Trip Gear.—The mechanism on the steam valve spindle for operating the valve constitutes what is called a *trip gear*. There

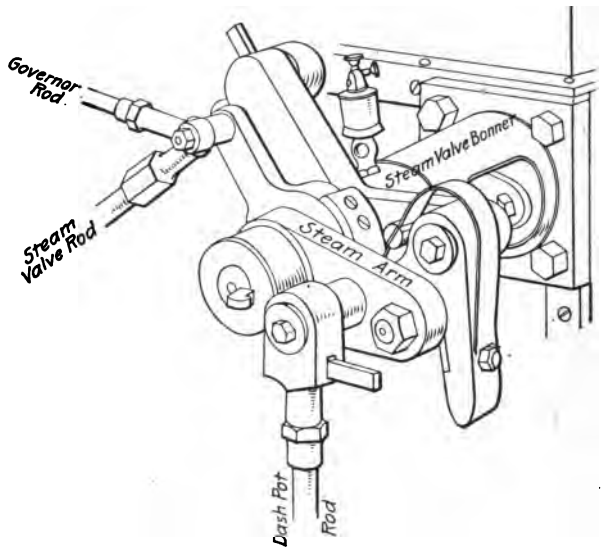

FIG. 150.—Reynolds trip gear.

are a number of trip gears for Corliss engines and descriptions of the common ones will be found in *Power*, Sept. 6 and 13, 1910. Probably the best known and most widely used design is due to Edwin Reynolds, at one time chief engineer of the E. P. Allis Co. Figs. 150 and 151 show the essential parts of the Reynolds gear. Referring particularly to Fig. 151, a bell crank lever *free* on the valve spindle is continuously and positively

rocked by the rod from the wrist plate. Attached to the bell crank is a *hook* or *latch* which is pressed in toward the valve spindle by a spring. This latch engages a projecting *block* on the steam arm which is the *only arm keyed* to the valve spindle. Thus to oscillate the valve spindle, the motion from the wrist plate must take the round-about path through the bell crank, the latch and the steam arm.

The governor reach rod is attached to the governor arm G, which is *free* on the valve spindle. As the bell crank is moved counterclockwise to the position shown in Fig. 151b, the left hand side of the latch comes in contact with a knock-off cam on the

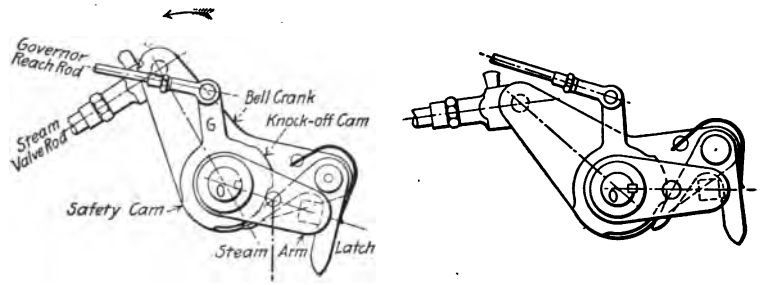

(a) Latch Raising Valve, (b) Latch Released

FIG. 151.—Reynolds trip gear.

arm G, which causes the latch to disengage the block on the steam arm and *disconnect the valve* from the wrist plate mechanism. The steam arm is attached to a *dash pot rod* which continually exerts a downward pull and tends to close the valve. As soon as the steam arm is disengaged from the latch the dash pot pull prevails and the valve is closed. As long as the speed of the engine is stable the position of the knock-off cam is unchanged, but a movement of the governor to secure equilibrium under a different load causes the cam to be shifted slightly about the spindle, thus changing the time at which the latch is disengaged and consequently the time of cut-off. As the engine slows down and the governor balls fall, G is rotated counterclockwise thus delaying the cut-off. A safety cam is usually provided so that if the arm G is moved to an extreme position due to the governor balls falling very low, the latch will not engage with the block, no steam will be admitted to the cylinder and the engine will stop. The safety cam will come into play in case an accident

to the governor belt or gears causes the governor to stop. It is necessary to have some means of preventing the safety cam from acting when the engine is being started.

Two general arrangements of the releasing gear are in common use, known as *inside hooks* and *outside hooks*. The former is shown in Fig. 145 and the latter in Figs. 150 and 151. With one arrangement the valve admits steam by turning in one direction and in the other by turning in the opposite direction.

It is evident from the description of the action of the trip mechanism given above that the latch can be disengaged only while it is *moving upward*, and that if it is not pushed out by the cam during that part of its motion it will not be disengaged at all, but will retain its hold on the steam arm and the whole mechanism will move as though positively connected.

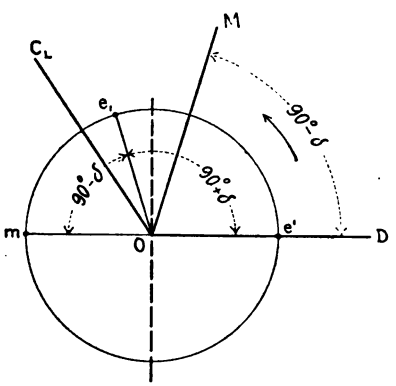

FIG. 152.

The bell crank, Fig. 151, carries the hook upward as the wrist plate moves through the complete angle of oscillation, that is, from one extreme position to the other. This motion of the wrist plate is derived from the eccentric which, as it turns from one dead center position, e', Fig. 152, through half its revolution to the other dead center, m, moves the wrist plate through its entire angle of oscillation and draws the valve open by raising the steam arm. When the crank is on center, OD, the eccentric is at Oe_1, $90° + \delta$ ahead of the crank, and the crank can then rotate only through the angle $90° - \delta$ to the position OM before the eccentric reaches the position Om and changes the direction of motion of the wrist plate, carrying the latch downward and away from the knock-off cam. If the trip mechanism is to determine the time of cut-off it must act while the crank is moving through the angle $90° - \delta$. If the trip mechanism does not act, the cut-off will occur when the valve closes the port under the positive movement of the wrist plate, at crank position OC_L. The range of cut-off between OM, the latest controlled by the governor, and OC_L, the cut-off without the trip action, is entirely lost.

The exhaust valves of Corliss engines are always positively driven either by the wrist plate which operates the inlet valves, by

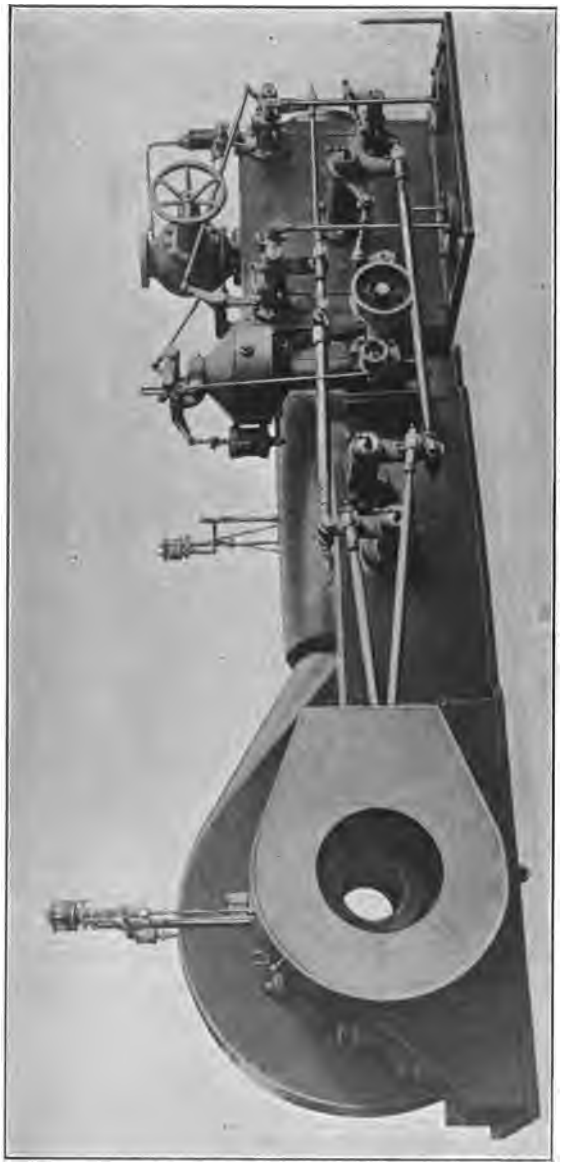

FIG. 153.—Valve gear side of double eccentric Corliss engine. Steam valves operated by levers, exhaust valves by wrist plate.

a wrist plate independent of the inlet valves, or by levers or rods which secure the same effect as the wrist plate. See Fig. 153.

To cause *release* and *compression* to occur at the proper times requires a *positive angle of advance* of about 15° or 20° for the eccentric operating the exhaust valves. If only one eccentric is used, the inlet valves must be operated from the same wrist plate as the exhaust valves and on account of the angle of advance of 15° or 20° the usefulness of the governor is confined to early cut-offs as already explained in connection with Fig. 152. To increase the range of cut-off controllable by the governor and also to make the exhaust valves entirely independent of the inlet

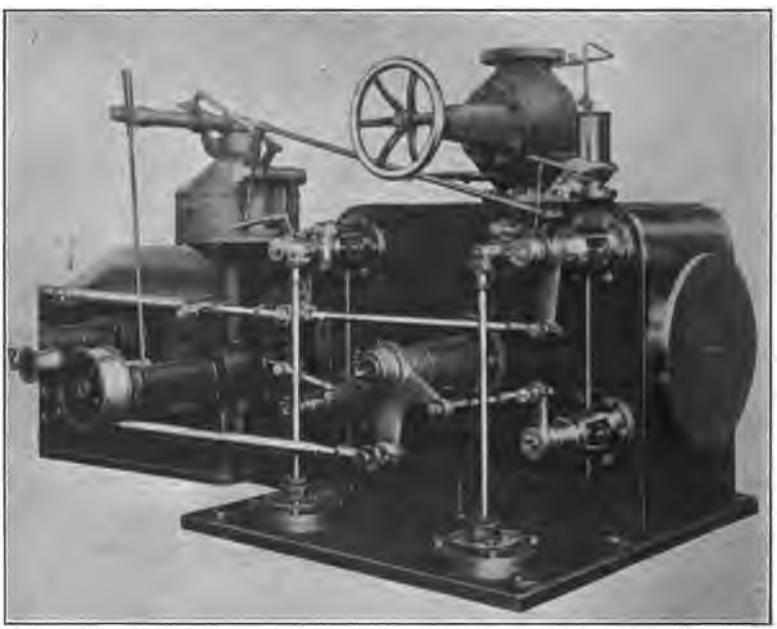

FIG. 154.—Near view of valve gear, double eccentric Corliss engine.

valves, two eccentrics are often used. With only one eccentric the latest cut-off which the governor can control is about 3/8 stroke, but with two eccentrics this range can be increased to about 3/4 stroke.

If a separate eccentric is used to operate the inlet valves it can be given a *negative angle of advance.* This increases the time between the admission position and the extreme position of the wrist plate, making the trip operative over a wider range. When two eccentrics are used and the one for the admission valves is

given a negative angle of advance, the *trip must always act* or the engine will take steam during more than the entire stroke.

Figs. 153 and 154 show the valve gear of the Allis-Chalmers Corliss engine with independent admission and exhaust valves.

Design of Corliss Valves.—General Considerations. An important consideration in designing Corliss valves is to make them sufficiently stiff and rigid. The width of the valve is always small in proportion to its length but strength can be secured by properly shaping the body of the valve as illustrated in Fig. 146. Sometimes it is advisable to add stiffening ribs. Regardless of the shape chosen, care must be taken to see that the passageway for the steam is not obstructed.

In locating the valves and shaping the metal of the cylinder casting around them, provision should be made for removing the condensed steam, and no pockets or hollows should be left which will hold water.

It is convenient to have the inlet and exhaust valves of the same diameter. For preliminary purposes this can be taken as 1/3 to 1/5 the cylinder diameter.

The exhaust valves are made to operate over the ports leading to the exhaust chamber and not those leading to the cylinder. This allows the steam pressure to hold the valve firmly against its seat. Since this construction tends to increase the clearance volume it is necessary to shape the valve so that only the required passage area is left open.

In designing Corliss valves the port openings are computed in the same manner as for slide valves. With single eccentric gears the admission ports can be figured on a nominal steam speed of 8000 ft. per minute. For double eccentric gears the nominal steam speed should be taken as 7000 ft. per minute.

Layout.—The method of laying out a Corliss gear can best be described by an example. Let it be required to lay out the valve gear for an 18″ × 36″ 100 R.P.M. horizontal Corliss engine, to have one wrist plate and to give release at 98% of the stroke and compression at 96%, the valves to be single ported and the gear to have the hooks inside.

Computation for admission port:

$$2 \times \frac{36}{12} \times 100 \times \frac{\pi (18)^2}{4} = 8000 \times \text{area of port}$$

Port area = 19.1 sq. in.

The length of the port in a Corliss engine is usually equal to the diameter of the cylinder, which in this case is 18″. The width of the admission port is therefore $\frac{19.1}{18} = 1.06''$.

Similarly the exhaust port must be

$$1.06 \times \frac{8000}{6000} = 1.4'' \text{ wide.}$$

The width of the piston for such an engine would be about 5″ and the clearance distance at each end of the cylinder 1/2″, making the length between cylinder heads

$$36'' + 5'' + 1'' = 42''.$$

A longitudinal section of the cylinder would show the bore as a rectangle 18″ × 42″.

The diameter of the valves should be proportional to the diameter of the cylinder and should be from 1/3 to 1/5 the cylinder diameter. This gives extreme values of $\frac{18}{3} = 6''$ to $\frac{18}{5} = 3.6''$, from which a conservative diameter of 5″ can be chosen for preliminary purposes. All the valves should be of the same diameter.

Allowing 1″ for the thickness of the metal of the valve seat and the counterbore of the cylinder, the vertical distance between the centers of the valve should be as shown in Fig. 155:

$$18'' + 5'' + 1'' + 1'' = 25''.$$

The centers of the valves may be located in line with the inside surfaces of the cylinder heads but this is often modified to obtain more advantageous forms of ports. The important consideration is to keep the clearance volume down to a minimum. The wrist plate is located at the intersection of the diagonals passing through the centers of the valves.

The length of the valve arms may be taken equal to the diameter of the valves, and the wrist plate arm, or the distance from the fulcrum of the plate to the pins, as 1 to $1\frac{1}{2}$ times the length of the valve arms. Taking as an average $1\frac{1}{4}$, the length of the wrist plate arm is $1\frac{1}{4} \times 5'' = 6\frac{1}{4}''$. These proportions are for preliminary purposes only and it remains to be seen by a careful layout on the drawing board whether they will give satisfactory results.

Starting with the location of the valves and wrist plate as

shown in Fig. 155, scribe arcs around O and O_1 to represent the ends of the wrist plate arm and steam valve arm respectively. Also draw a circle to represent the valve seat.

Ordinarily the total angle of oscillation of the wrist plate is

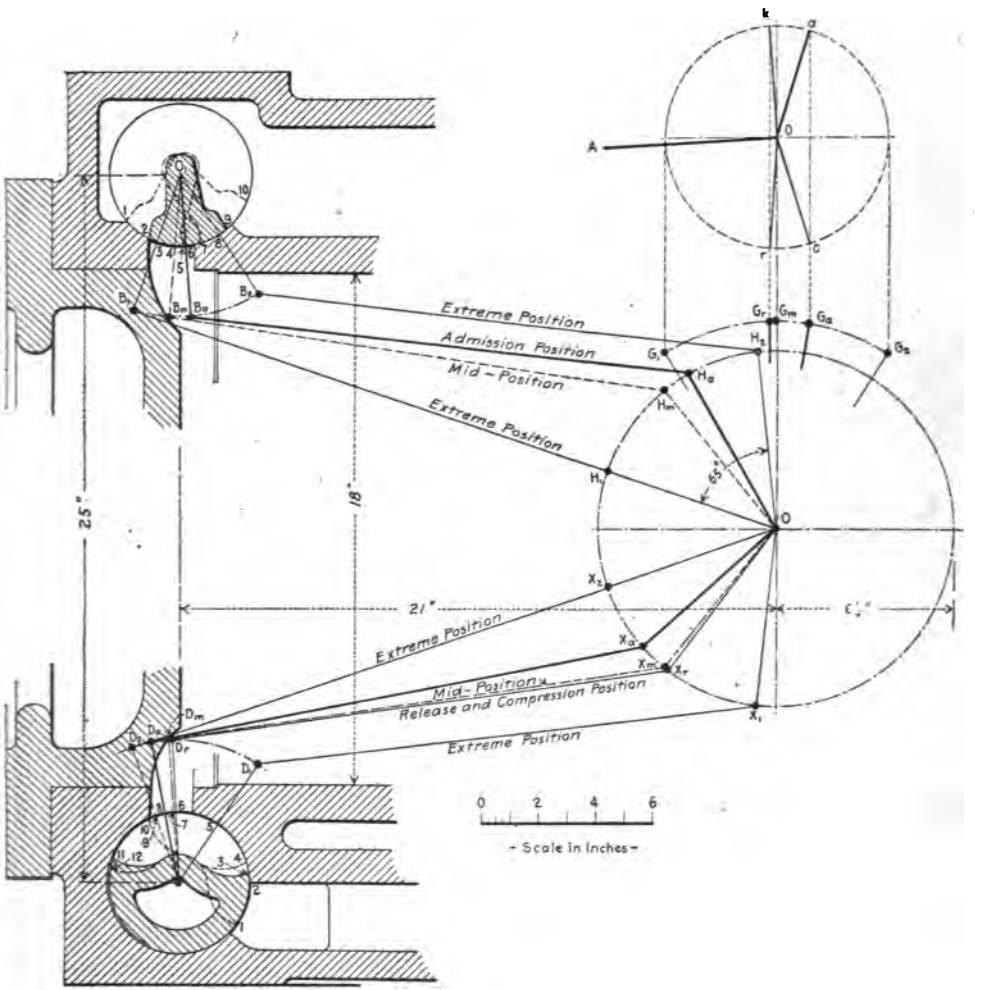

FIG. 155.—Corliss layout.

from 60° to 90°, with 75° as a very good average. This angle was first taken as 75° and the mechanism drawn in the extreme position $OH_1B_1O_1$ with OH_1B_1 a straight line tangent to the arc B_1B_2 representing the path traversed by the valve

arm. In other words the angle $H_1B_1O_1$ was made equal to 90° and the angle OH_1B_1 equal to 180° for a preliminary trial, with 75° for the angle of swing of the wrist plate. The wrist plate was then imagined swung through the assumed angle of oscillation (75°) and the other extreme position of the mechanism was drawn. The angle between the valve arm and the valve rod was then investigated to see if it came within the 140° limit. Often this angle comes too large, if in the other extreme position it is about 90°, and it is then necessary to assume a longer valve rod. This will cause the angle $H_1B_1O_1$ to be less than 90° but it should always be kept greater than 40°. In this particular problem, with a 75° angle of oscillation for the wrist plate, if one angle is made 90° the other works out 153.5° with a valve rod 17 11/16″ long and the rod must be increased in length to 18 1/4″ before the larger angle falls within 140°. This causes the smaller angle to be reduced to 83°. Sometimes it is necessary to change the length of the valve arm before satisfactory conditions are secured. The designer should not be satisfied until he has an arrangement which will make the angle $H_1B_1O_1$ as near 90° as possible without having $H_2B_2O_1$ exceed 140°, because then he will have the largest wrist plate effect. The mid-position of the mechanism should be drawn and the ratio of the valve arm throws examined; the first layout showed one angle to be 19° and the other 48°, a ratio of 48/19 = 2.52; average values are 2.5 to 3. If the angle of movement of the valve is too large the valve arm should be lengthened or the swing of the wrist plate reduced.

Before the design is carried any farther it should be noted whether the valve can be expected to give the necessary port opening. A certain steam lap may be arbitrarily assumed and then, by swinging the valve to its extreme position, the probable port opening can be determined. If this is thought to be too small or too large it can be modified by changing the length of the valve arm, or the swing of the wrist plate, thus changing the angle of oscillation of the valve. The Allis-Chalmers Company recommends the following values for lap and lead:

Cylinder diameter	Steam lap	Exhaust lap	Lead
8″ to 14″	3/16″	1/16″	1/32″
14″ to 22″	1/4 ″	1/8 ″	1/32″
22″ to 32″	5/16″	3/16″	3/64″
32″ to 36″	3/8 ″	1/4 ″	1/16″

In the layout under consideration the 48° of rotation from the mid-position to the extreme position caused a movement of 2.1″ at the valve face and subtracting 1/4″ for the assumed steam lap gave a net opening of about 1.85″ which would be too large, since the computed amount was only 1.06.″ Three possible changes to reduce this port opening were considered, viz:

1. Lengthening the valve arm.
2. Reducing the swing of the wrist plate.
3. Reducing the diameter of the valve.

It was decided to reduce the swing of the wrist plate to 65° and a new layout of the mechanism was made. In the new layout,

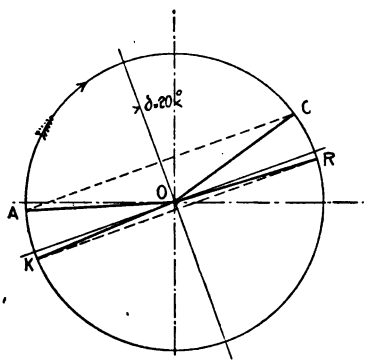

FIG. 156.

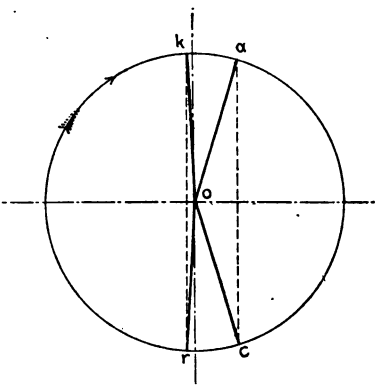

FIG. 157.

with the angle at B_1 equal to 90° the angle at B_2 came 130° and the ratio $\frac{B_m O_1 B_2}{B_1 O_1 B_m} = \frac{37.6}{14.5} = 2.6$. The total swing of the valve measured 52.1 degrees. With this new mechanism the steam port opening promised to be about $1\frac{1}{4}$″ and the exhaust port opening about $1\frac{1}{2}$″. These were considered satisfactory.

From the given data it is possible to construct a diagram giving the positions of the crank for the various events, as shown in Fig. 156. Release and compression are given, thus determining the angle of advance as 20°; admission may be chosen at 3° before dead center. Since the engine is equipped with a trip gear the cut-off is ordinarily entirely independent of the wrist plate movement. If, however, the engine should be so heavily loaded that the trip would fail to act, the valve would be closed by the wrist plate when the crank reached the position *OC* (Fig. 156). By rotating Fig. 156 clockwise through the angle $90° + \delta$

the various crank positions become corresponding eccentric positions and Fig. 157 results.

Fig. 157, magnified or reduced as explained in connection with Fig. 148, is then drawn above the wrist plate in Fig. 155 so that the vertical axes coincide, and the diameter of the eccentric circle equals the horizontal movement of the point G on the wrist plate.

At the time of head end admission the eccentric would be at a (Fig. 155), the reach rod pin at G_a, the steam valve rod at H_aB_a, the valve arm at B_aO_1, and the left hand edge of the valve at 2 just ready to admit steam as the valve turns counterclockwise. The exhaust valve rod would at that instant be at X_aD_a with the valve closed and rotating counterclockwise.

As the eccentric continues to revolve G_a moves to G_2, H_a to H_2, B_a to B_2 and the extreme edges of the steam valve from 2 and 9 to 5 and 10. At the same time the point X_a moves to X_2, D_a to D_2 and the edges of the exhaust valve from 3 and 11 to 4 and 12.

On the return swing of the wrist plate (swinging counterclockwise) when the mechanism is in the mid-position, the edge 2 of the steam valve will have slipped past the port by an amount equal to the arc between points 4 and 6. This distance is therefore the *steam lap*. Similarly the distance between the two points 6 and 7 on the exhaust valve is equal to the *exhaust lap*.

The two extreme positions of the steam valve bring the edges in one case to 1 and 7 and in the other to 5 and 10. Both points 1 and 10 should be beyond the metal of the cylinder casting to avoid wearing shoulders; 7 must be sure to seal the port, with some margin; 5 should provide sufficient opening.

The exhaust valve is shaped so as to give a uniform passage for the exhaust without any unnecessary space to increase the clearance volume. When wide open with X at X_1, the edge 11 is at 10 and the edge 3 at 1. The distance between the points 2 and 1 is the maximum exhaust opening and point 2 is the point of opening and closing when release and compression occur.

Only one end of the cylinder has been discussed, for simplicity and because the solution for both ends would necessitate considerable reduction in the size of the drawing; furthermore, the solution for the other end is so similar that additional explanation seems unnecessary.

The Dashpot.—When the trip mechanism of a Corliss engine disconnects the hook from the valve the *dashpot* closes the valve. The dashpot has two functions to perform:

1. It must exert a downward pull on the valve.
2. It must be self cushioning.

Several different forms of dashpots are in common use; they are all similar in action. As the wrist plate mechanism draws the valve open, the dashpot rod (Figs. 145 and 150), with the plunger at its lower end, is raised. A partial vacuum is thus formed under the plunger and the atmosphere then exerts a

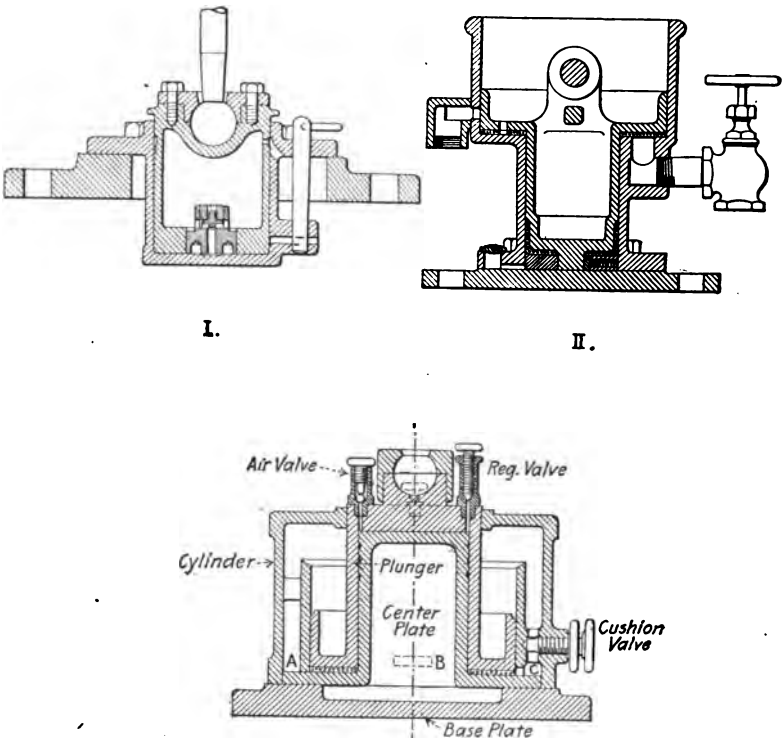

FIG. 158.—Typical forms of dashpots.

downward pressure which is ready to force the valve closed as soon as it is released by the trip. To reduce shock and prevent the dashpot from being noisy air is used as a cushion to bring the parts quietly to rest.

Typical forms of dashpots are shown in Fig. 158. The first illustrates the single chamber and the other two the double chamber type. Referring to III, which is a section of the

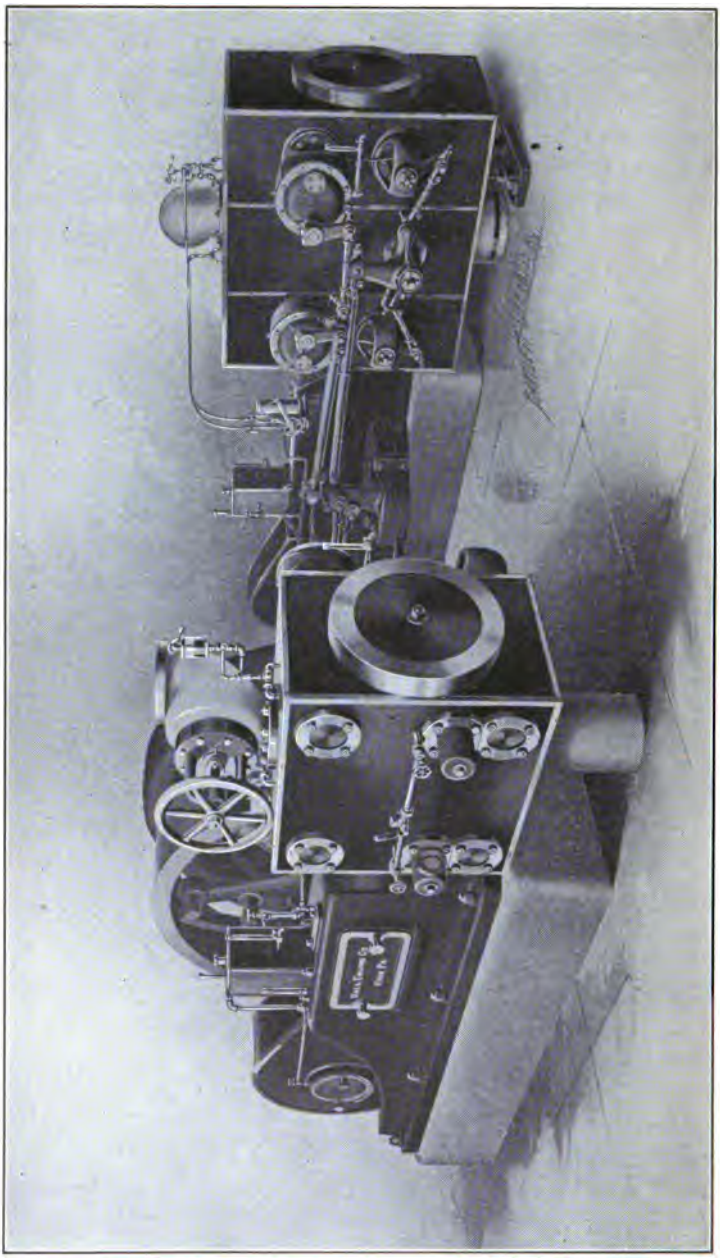

FIG. 159.—Ball engine showing Armstrong non-detaching valve gear.

Vilter dashpot, when the plunger is raised a partial vacuum is formed beneath it; the completeness of this vacuum and therefore the downward force exerted can be adjusted by the *regulating valve*. This valve allows air to enter below the plunger as desired. When the plunger descends, the air which has been allowed to enter through the regulating valve, is forced out through the *air valve* which is of the ball type. Although this air valve is also adjustable, very little cushioning is expected from the inner cylinder. Its duty is to provide the downward pull. The outer cylinder is to give the cushioning action. By adjusting the *cushion valve* the rate of flow of the air through the passage *C* can be regulated to give the desired cushion.

FOUR-VALVE ENGINES

Engines equipped with four Corliss valves, *positively* connected, are called *four-valve engines*. The mechanism is designed so as to give to the valve practically the same movement as in

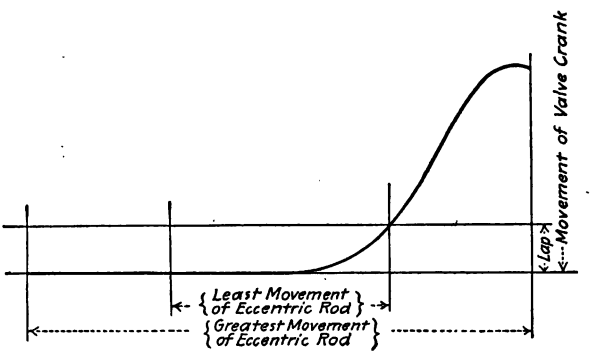

FIG. 160.—Movement curve of Armstrong gear.

the Corliss engine. At the proper time the valve is opened quickly and then closed quickly and held almost stationary during the idle period. In the Corliss engine the steam valves are momentarily disconnected from the eccentric mechanism when the trip acts, but the valves of a four-valve engine are positively connected and under the influence of the eccentric at all times.

The Armstrong non-detaching valve gear used on the Ball four-valve engine is a good example of this type. Fig. 159 shows the general arrangement of the mechanism. A diagram in which the movement of the eccentric rod is represented horizontally,

and the resultant movement of the valve, vertically, is shown in Fig. 160. The valve and the valve gear case are shown in Fig. 161, and Fig. 162 shows the case with the cover re-

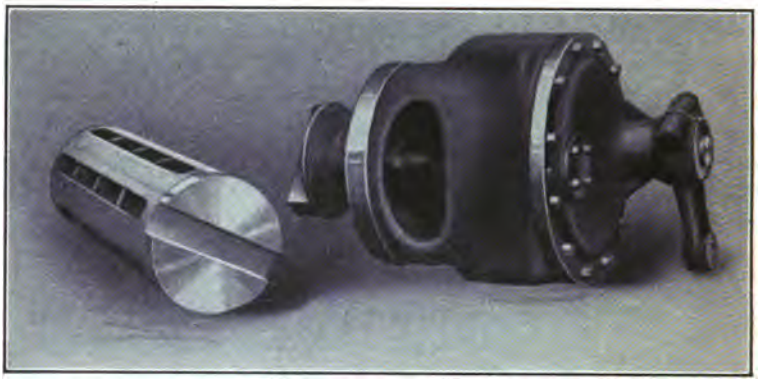

FIG. 161.—Armstrong non-detaching gear. Valve and valve gear case.

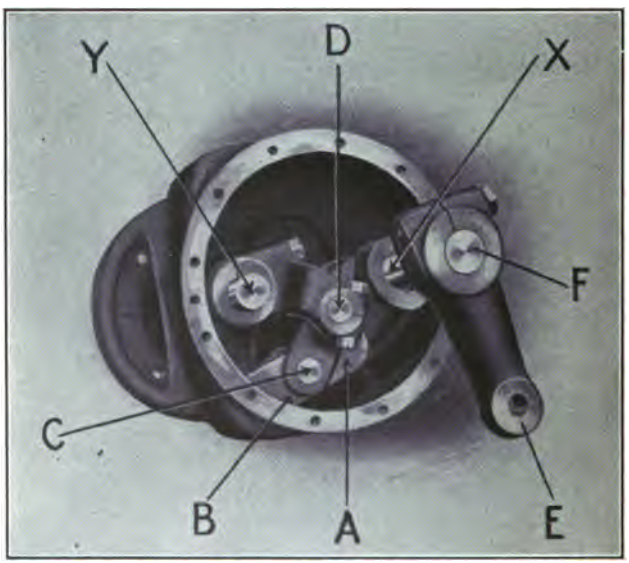

FIG. 162.—Armstrong non-detaching gear. Cover of case removed.

moved. The gear is shown in elementary form and in several consecutive positions in Fig. 163. By following the motion of the various parts, it may be seen that the link *CD*, connecting with

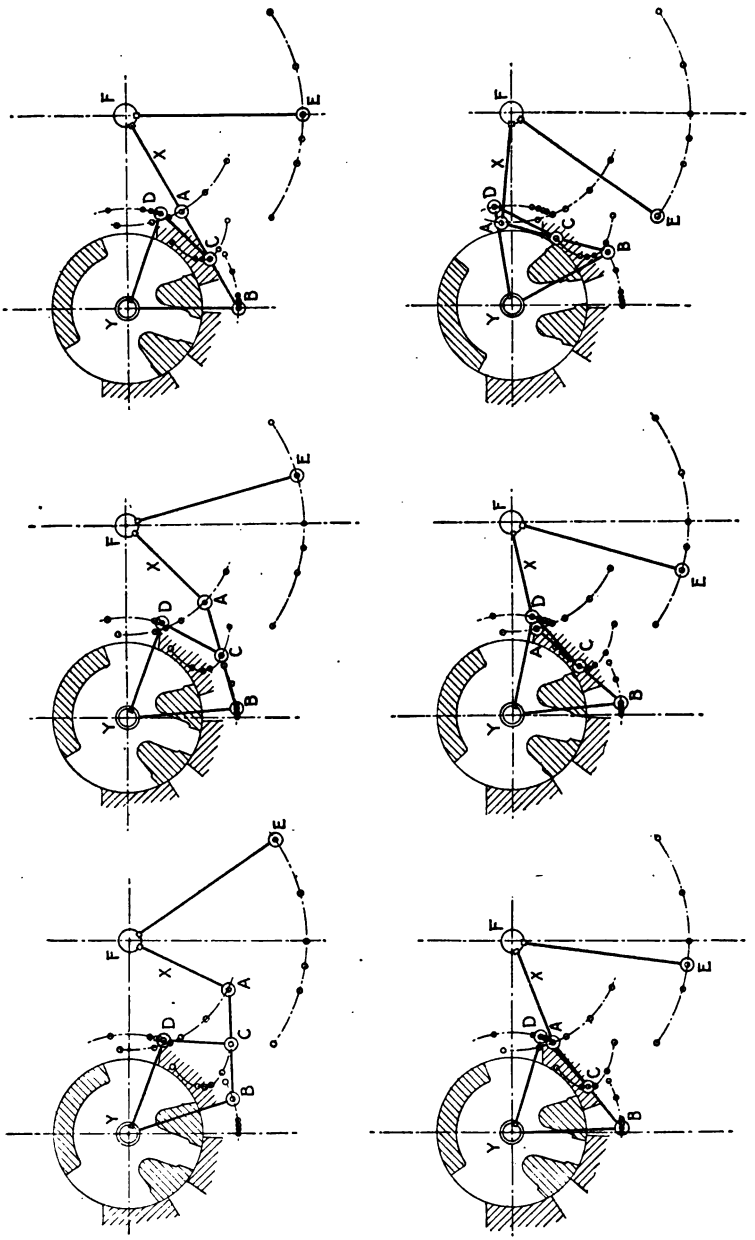

FIG. 163.—Consecutive positions of Armstrong valve gear.

the valve crank YD, simply swings around the pin D without imparting any motion to YD for one-half of the total movement of the eccentric rod which drives it. At usual loads the valves have their highest speeds at the instants of opening and closing. At each valve all the parts of the gear, except the main driving arm, are enclosed in a tight casing filled with oil.

CHAPTER XIII

POPPET VALVE GEARS

Poppet or Lift Valves.—The *poppet or lift valve* has long been predominant in German stationary practice in the field where the Corliss valve has been used in the United States. The poppet valve is fundamentally different from the slide and oscillating valves. Instead of sliding or rocking over a seat to uncover a port, the poppet valve lifts from the seat with a movement *perpendicular* to the port. The slide valve is in constant motion but the poppet valve, after seating, remains at rest until the time comes for it to open again. The main *advantage* of the poppet valve is due to the fact that it has no movement on the seat, thus requiring no lubrication and being particularly adapted to the use of superheated steam. The four valves are independent of each other and therefore very precise adjustments in the diagram points can be made.

FIG. 164.—Double seated poppet valve and bonnet.

Poppet valve engines are limited in *speed* on account of the inertia forces of the closing valves. Usually they are operated at about the same speeds as Corliss engines although 150 or even 200 R.P.M. are attainable in some cases.

Typical forms of poppet valves are shown in Figs. 164, 165 and 166, the last being quadruple seated and the others double seated. All are designed so as to be nearly balanced. In order to place the valve in position the seatings must have different diameters. The inside diameter of the larger seating should be the same as the outside diameter of the smaller seating so that the unbalanced area exposed to steam pressure will not be larger than necessary. When the valve is closed the total area subjected

to an unbalanced pressure is only an annulus equal to or slightly exceeding the combined width of the surfaces in contact. A small unbalanced pressure is desirable because it tends to keep the valve steam tight and prevent accidental opening.

Four poppet valves are necessary on a double acting engine, two for admission and two for exhaust. In the study of slide

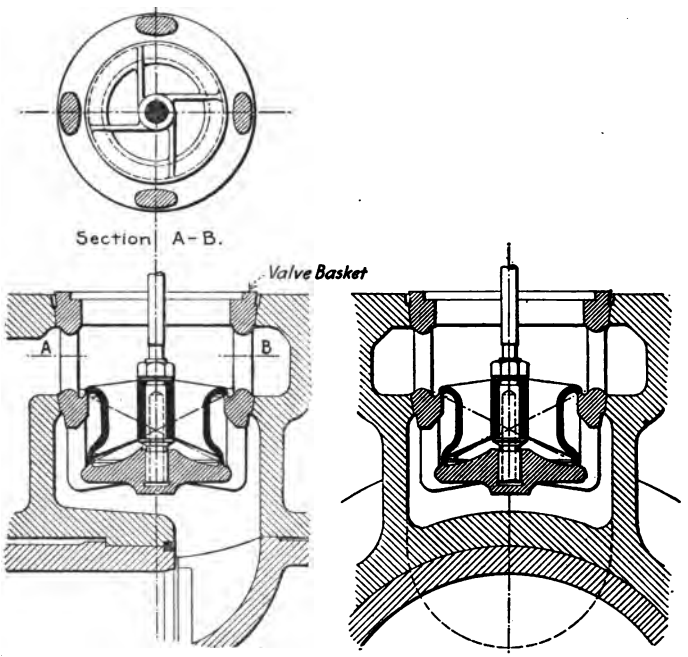

FIG. 165.—Double seated poppet valve showing position in cylinder.

valves it was seen that only one valve was necessary on a double acting engine and that it could be made to connect each cylinder port alternately with the steam and exhaust ducts; in other words, one chamber was connected alternately with two other chambers. A poppet valve can connect or disconnect only two chambers. The valve stem is always vertical.

A casting called the *valve basket* (see Fig. 165) contains the seats for the valve and four such castings are inserted in the cylinder casting. The valve and basket should be of the same material and cast from the same heat so that both will deform equally under the influence of heat and in that way prevent warping.

Usually they are made from the best grades of cast iron. To secure perfect fits the valve is ground on the seats. The most particular manufacturers do this work with the valve and basket exposed to steam at the pressure which will be used in the engine.

The valve should be *light*, and *guided* so that it will seat correctly. Sometimes fins are used which slide on the valve basket

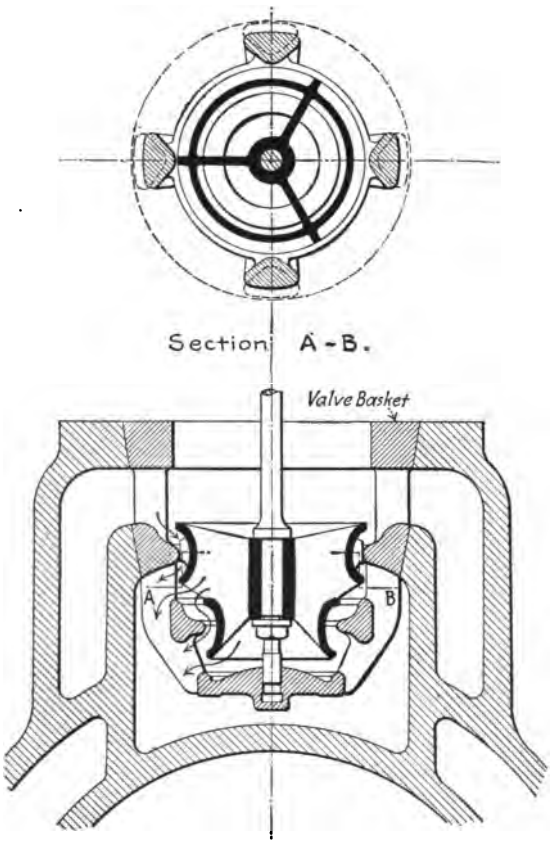

FIG. 166.—Quadruple seated poppet valve.

and keep the valve central. Usually the valve stem extends beyond the valve and by sliding in a small cylindrical cavity in the disk of the basket keeps the valve concentric with the seats. It is not sufficient to depend only on the stuffing box and stem.

Different practice is followed in regard to the angle of seating.

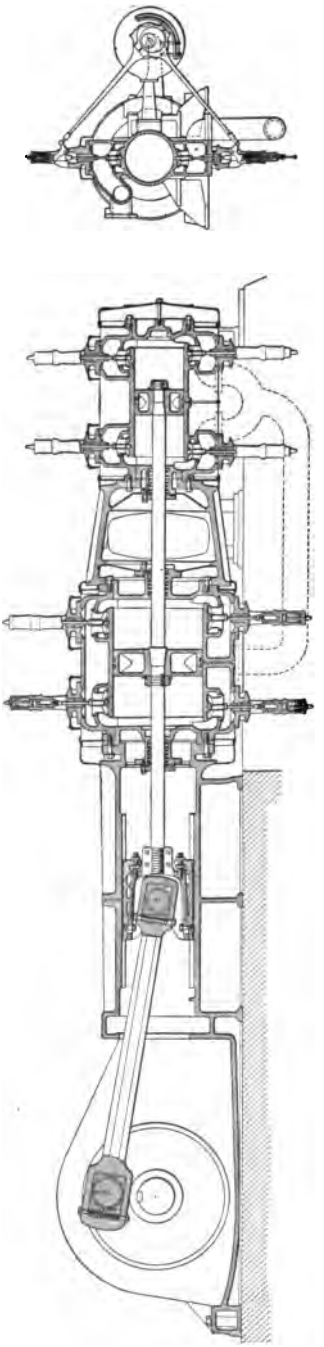

FIG. 167.—Lentz engine, showing general arrangement.

Sometimes the *seat* is made flat and sometimes conical, the angle of the cone with the horizontal varying from 30° to 60°. The inclined seat does not cause so much change in the direction of flow of the steam; also the speed of the valve, perpendicular to the inclined seat, is less than the vertical speed, thus reducing the valve hammer. Some authorities advise making the cones of the two seats have a common apex, it being assumed that under the action of heat the valve is deformed in all directions equally. Then, even though the seats move a trifle, proportionality is preserved, and the fit remains tight. The horizontal width of the seating is small, usually 1/8″ to 1/4″.

As in the other types of valves the *size and proportions* of a poppet valve are governed by the required passage areas, which in turn depend upon the allowable steam speeds. The same nominal steam speeds as were used for Corliss valves may be applied to poppet valves. All the steam flowing through the valve must pass through one circular opening whose diameter may be designated as D. This circular opening is not clear but is obstructed by the valve stem, the valve hub, the body of the valve and any ribs or fins that may form a part of the valve. In a preliminary calculation it may be assumed

that 20% to 40% of the total area under the upper seat is obstructed. The net unobstructed *area* would then be

$$A = (0.6 \text{ to } 0.8)\frac{\pi D^2}{4}$$

or

$$D = \sqrt{\frac{4A}{(0.6 \text{ to } 0.8)\pi}}$$
$$= (1.45 \text{ to } 1.26)\sqrt{A}$$

The *lift* if a double seated valve, to give this opening, would be determined as follows:

$$0.5A = h(\pi D - W)$$

where W is the sum of the widths of the ribs of valve and basket which reduce the free circumference

$$h = \frac{0.5\,A}{\pi D - W} = \frac{0.5A}{\pi(1.45 \text{ to } 1.26)\sqrt{A} - W}$$

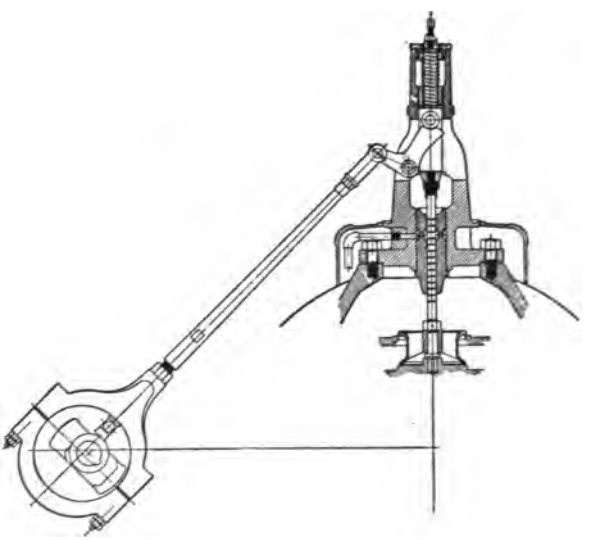

FIG. 168.—Sectional elevation of admission valve, showing constructional details

The *general arrangement* of a poppet valve engine is shown in Fig. 167, which is a longitudinal and transverse section of the Lentz Engine built by the Erie City Iron Works. The valve is double seated and is shown in detail in Figs. 164 and 168. There are no stuffing boxes for the valve spindles. The latter are ground to fit the long bushings within 0.001″ and grooves are turned in

the spindles to prevent leakage. This form of construction is particularly advantageous with superheated steam. The valves are turned to such diameters that the lower ring will just pass through the upper opening. No dash pots are used. The valve is moved by a cam acting on a roller. When the valve is seated the cam is not in contact with the roller, but the amount of clearance is too small to be shown in the drawing. The roller remains in contact with the cam until the valve is seated.

Alongside of the engine runs a horizontal *lay shaft* which is caused to rotate by a pair of bevel gears between it and the crankshaft. On the shaft are grouped eccentrics, one for each of the valves, and the rods of these eccentrics are coupled directly to the ends of the cam levers. The steam eccentrics are under the control of an inertia governor on the lay shaft. This governor shifts the position of the eccentric center and thus regulates the point of cut-off.

The *clearance* in engines equipped with poppet varies considerably with the form of the valve and the arrangement of the valves with reference to the cylinder. Usually the clearance will be from 4% to 10%.

Poppet Valve Gears.—The valves usually derive their motions from a *lay shaft* running parallel to the center line of the cylinder (see Fig. 167) and driven by the crank shaft through a pair of mitre gears. On hoisting and other reversing engines equipped with link motion, however, the valves are operated directly from the crank shaft. In the case of vertical engines the motion is sometimes taken directly from the crank shaft but usually an intermediate shaft must be added.

Between the lay shaft and the valve there may be either a positive or a trip motion. With the former the valves are lifted and returned to their seatings by the mechanism or in accordance with the motion of the mechanism. In the latter case the valve is not closed by the mechanism but by some special closing force, such as a spring, which pushes the valve back to its seat as fast as the mechanism connected to the valve will allow it to reseat.

When *trip motion* is used the valve is opened positively until at some instant, controlled by the position of the governor, the valve stem is disconnected from the mechanism and the valve is automatically closed by a spring which is always ready to act. An air or liquid dashpot is provided to reduce or eliminate shock when the valve seats. A very good example of a liquid dashpot

is shown in Fig. 169. The position of the finger on the governor shaft determines the time when the hook will be disengaged and the lower spring allowed to close the valve. As the valve descends, the oil in the dashpot above is displaced from the lower to the upper side of the plunger through holes in the

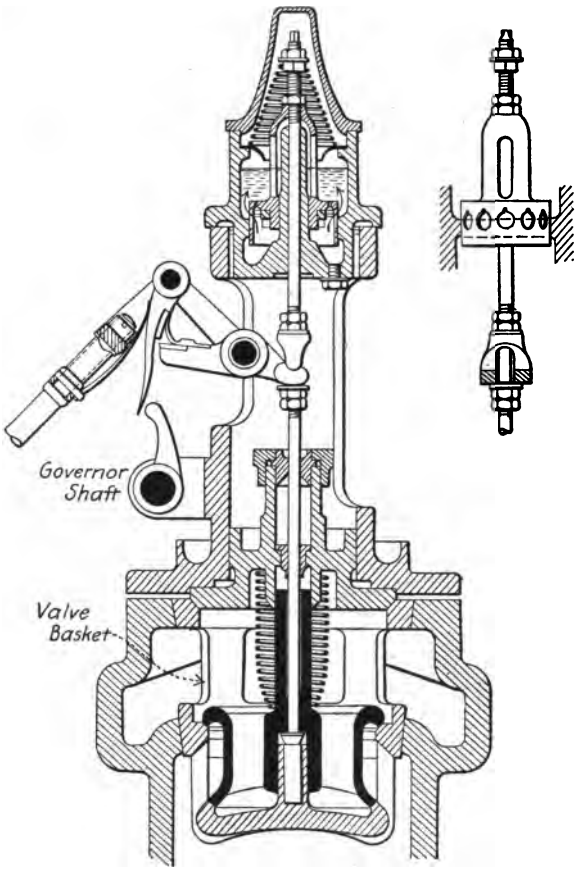

FIG. 169.—Double seated poppet valve and bonnet, showing dashpot.

sides. The area of the openings for the passage of the oil diminishes as the valve nears its seat and this dampens the valve and causes it to seat quietly.

With the common arrangement of a lay shaft from which the valves are operated, four eccentrics are used, one for each valve. The eccentrics for the inlet and exhaust valves on one end of the

cylinder are attached to the lay shaft diametrically opposite those for the other end of the cylinder. Any eccentric can be adjusted without affecting any other; thus one valve motion is independent of all the others.

The mechanism must be constructed so that after the valve is seated the motion of the gear will not affect the valve until the time comes for it to open again. When a trip is used this is obtained quite naturally but with a positive gear the desired result can only be obtained by using some form of rolling lever, rotating cam or oscillating cam.

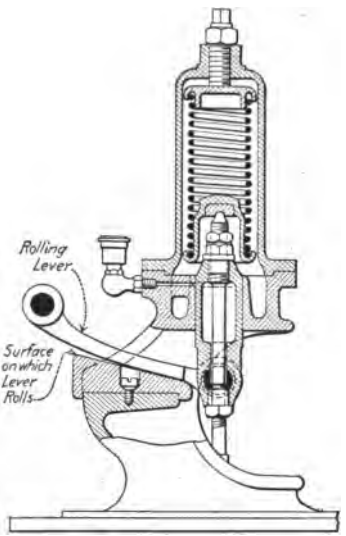

FIG. 170.—Poppet valve bonnet showing rolling lever.

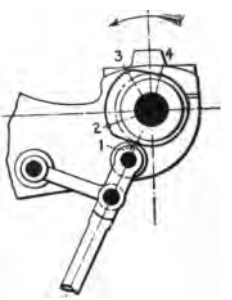

FIG. 171.—Cam and roller.

A *rolling lever* is shown in Fig. 170. The fulcrum of this lever is the changing point of contact between it and the curved surface over which it rolls, when the valve is open, but when the valve is closed the lever is lifted from the curved surface and the fulcrum becomes the pin at the valve stem. Any movement of the lever after it leaves the curved surface does not affect the valve. The lever and its support are designed so that the motion of the valve is slow when near its seat but rapid in giving the full opening. This is effected by the varying lever arms as the fulcrum moves away from the valve in opening and approaches again in closing. The lever does not close the valve but the valve is returned to its seat by a spring as the lever allows it. When the valve is seated the fulcrum of the lever is at the valve stem end and the valve is

held closed by the spring until the lever and the plate again come into contact.

It is important to design the rolling lever so that it will roll and not slide over the support.

If *rotating cams* are used on the lay shaft instead of eccentrics, the cams can be so shaped that the valve will be lifted and allowed to return to its seat at the proper times. In such cases the rods to the valves terminate in rollers which are in contact with the cams as shown in Fig. 171.

An *oscillating cam*, or *cam lever* as it is sometimes called, is shown in Fig. 168. This cam is rocked by the eccentric rod and the shape of the curved surface causes the valve to open and close at the proper times. The cam also determines the amount of lift and it must be shaped so that the valve will remain seated during the idle period. By properly shaping the curves of the cam, shocks at the beginning and end of the valve movement can be avoided.

Spiral steel springs are generally used to supply the necessary closing force whether the valve is operated positively or by trip mechanism. If the valve lowers for closure, the spring may be computed as follows:

Let F = mean force of the spring
Q = necessary force to close the valve
W = weight of the valve and stem, in pounds
t = time of closure in seconds
h = valve lift in feet
a = acceleration of valve
g = acceleration due to gravity

Then $$h = \frac{at^2}{2}$$

$$a = \frac{2h}{t^2}$$

$$Q = a\frac{W}{g}$$

$$F + W = Q = \frac{aW}{g}$$

$$F = \frac{aW}{g} - W = W(\frac{a}{g} - 1) = W\,(\frac{h}{16.2\,t^2} - 1)$$

The allowable closing time may correspond to about 12° of crank rotation.

In making a *layout* of a poppet valve gear the first step is to assume the general proportions of the entire mechanism, *i.e.*, the location of the various pins and fulcrums, the lengths of the rods and the throw of the eccentric. These dimensions should be so chosen that the valve lift will be sufficient under all probable conditions of operation. It is a good plan to draw the valve lift curves which the assumed mechanism will give and then compare these curves with the theoretical valve lift ellipse which is determined by plotting the piston positions against the computed necessary port openings based on the allowable steam speeds. This comparison will usually suggest desirable changes in the assumed mechanism and modifications should be made until satisfactory results are obtained. Finally a careful layout should be made in which the successive positions of each pin or other important part of the mechanism is shown for an entire revolution.

INDEX

Admission, 7, 8, 11, 14
  lines, 11
Allen valve, 65
Angle of advance, 13
Angular movement of connecting rod, 53
Angularity of connecting rod, 53
  of eccentric rod, 12
Areas of ports and passages, 40
Armstrong non-detaching gear, 155

Back pressure, 7
Balance ring, 70
  valves, 71
Ball engine valve, 66
  and Wood telescopic valve, 67
Bilgram diagram, 17, 21
Blake-Knowles valve gear, 117
Bridge, 52
Buckeye engine valve, 108
  governor, 75
Bushings, 59, 60

Cameron pump valve, 114
Cam levers, 167
  oscillating, 167
  rotating, 167
Centrifugal governors, 73
Characteristics of Zeuner diagram, 20
Compression, 7, 8, 14
Connecting rod, 2
Corliss valve gears, 136
  valves, design of, 147
Crank and piston, relative positions of, 1
  circle, 1
  pin, 2
  positions corresponding to certain eccentric positions, 15
Cross-head, 2
Curves, displacement, 56
Cut-off, 6, 8, 14

D slide valve, 2, 6, 8
Dashpot, 152
Design of Corliss valves, 147
  of slide valves, 84
Direct valves, 63
Displacement curves, 56
Double eccentrics for Corliss engines, 146
Double-ported flat valves, design of, 91
  piston valve, 65

Eccentric, 2, 4, 5, 14
  analogy between crank and, 4
  positions transferred to crank positions, 15
  rod, 2, 5
    angularity of, 12
  sheaves, 5
  straps, 5
Exhaust lap, 8, 9, 10
Expansion curve, 7
Extreme position of valve, 8

Flat valves, 58
    design of double-ported, 91
Forms of slide valves, 58
Four-ported valve, 67
Four-valve engines, 155
Fundamental idea of Bilgram diagram, 22
  of Zeuner diagram, 17

Governors, Ball and Wood, 96
  Buckeye, 75
  centrifugal, 73
  inertia, 73
  Rites, 76
  Robb-Armstrong, 77
  shaft, 73
  Westinghouse, 74

Indicator diagrams, 6, 11, 82
Indirect valves, 63

Inertia governors, 73
Inside admission valves, 63

Joy valve gear, 132

Lap angle, 13
  exhaust, 8, 9, 10
  steam, 8, 9, 10
Lead, 10, 11, 12, 13
  angle, 13
Lentz engine valve gear, 163
Lift valves, 159
Location of ports in valve seat, 70
Locomotive cylinder casting, 62
  piston valve, 60

Maximum port opening, 19, 22, 48
McIntosh-Seymour valve gear, 111
Meyer valve, 101
Mid position of slide valve, 8, 9, 13
Multiple ported valves, 63

Negative lap, 10

Obliquity of connecting rod, 54
Outside admission valves, 63
Overtravel, 56

Piston, 2
  and crank, relative positions, 1
  rod, 2
  valves, 58, 59
  velocity, average, 41
    instantaneous, 40
Poppet valves, 159
  valve gears, 164
Port areas, 40
  opening, 10, 40
Ports, location of, in valve seat, 70
Pressure plate, 66, 69
Pump valves, 114

Relative positions of piston and crank, 1
  of valve, eccentric, and crank, 14
Release, 7, 8, 14
Reversing gears, 120
Riding cut-off valves, 100
Rites inertia governor, 76
Robb-Armstrong governor, 77
Rockers, 71
Rolling levers, 166
Rotating cams, 167

Shaft governors, 73
  investigation of action of, 96, 97
Skinner engine valve, 70
Slide valves, design of, 84
  forms of, 58
Sliders, 2, 71
Solution of typical problems, 25
Steam chest, 2, 6
  lap, 8, 9, 10
  speeds, instantaneous, 41
    nominal, 42, 48
Stephenson link motion, 120
Stroke table, 55

Telescopic valve, 67
Trip gear, Reynolds, 142
Typical problems solved by both diagrams, 25

Use of valve diagrams, 25
Useful characteristics of Zeuner diagram, 20

Valve diagrams, 17
    use of, 25
  displacement curves, 56
  ellipse, 84
  functions of, 9
  gears, 1
  setting, 80
  stem, 2, 5
Valves, forms of slide, 58
  with riding cut-off, 100
Velocity of piston, 40

Walschaert valve gear, 123
Westinghouse governor, 74
Wire drawing, 40
Worthington duplex pump, 115
Wrist plate, 139

Zeuner diagram, 17

RETURN TO ➡ **CIRCULATION DEPARTMENT**
202 Main Library

LOAN PERIOD 1 **HOME USE**	2	3
4	5	6

ALL BOOKS MAY BE RECALLED AFTER 7 DAYS
1-month loans may be renewed by calling 642-3405
6-month loans may be recharged by bringing books to Circulation Desk
Renewals and recharges may be made 4 days prior to due date

DUE AS STAMPED BELOW

ICLF

NOV 8 1981

RET'D OCT 28 1981

AUG 06 1987

AUTO DISC JUL 08 1987

OCT 01 1988

AUTO DISC SEP 27 '88

SEP 11 1990

AUTO DISC AUG 23 90

UNIVERSITY OF CALIFORNIA, BERKELEY
FORM NO. DD6, 60m, 3/80 BERKELEY, CA 94720

YC 66947

U.C. BERKELEY LIBRARIES

B003019048

TJ547
E4

UNIVERSITY OF CALIFORNIA LIBRARY